SALMON SPRINGS TRANSMISSION MAIN REPLACEMENT

60% REVIEW SUBMITTAL
PUYALLUP, WASHINGTON

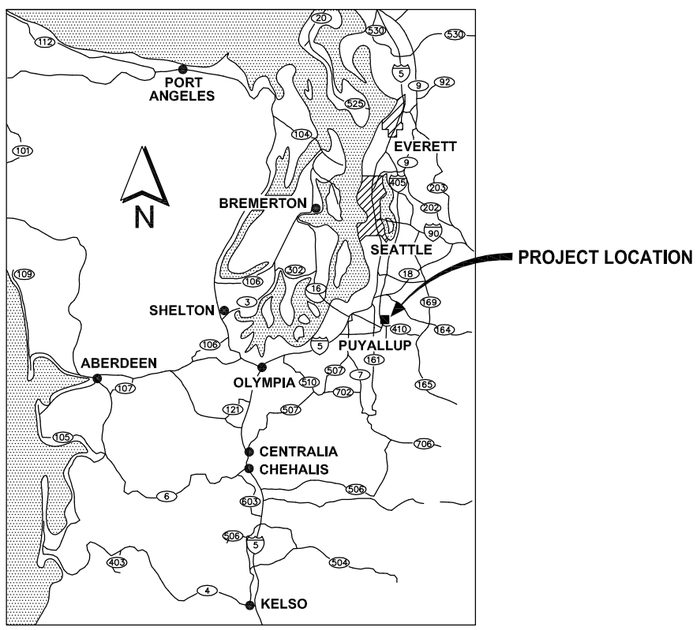

VICINITY MAP
NO SCALE

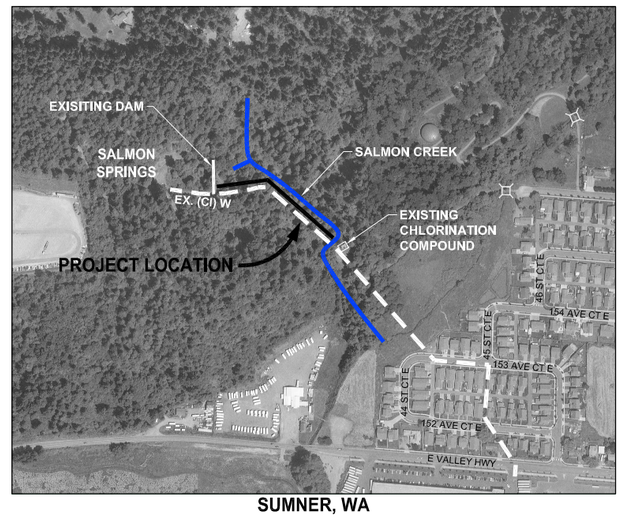

SUMNER, WA

LOCATION MAP
NO SCALE

INDEX TO DRAWINGS		
SHT NO.	DWG NO.	SHEET TITLE
GENERAL		
1	G1	TITLE SHEET, LOCATION, SITE, VICINITY MAPS AND INDEX TO DRAWINGS
2	G2	LEGEND, ABBREVIATIONS, AND NOTES (NOT INCLUDED)
3	G3	SURVEY CONTROL SHEET (NOT INCLUDED)
WATER		
4	C1	WATER PLAN AND PROFILE STA 10+00 TO STA 12+50
5	C2	WATER PLAN AND PROFILE STA 12+50 TO STA 15+40
6	C3	WATER PLAN AND PROFILE STA 15+40 TO STA 17+77.82
DETAILS		
7	DT1	MISCELLANEOUS DETAILS
8	DT2	MISCELLANEOUS DETAILS

APPROVED

BY _____
CITY OF PUYALLUP
ENGINEERING DEPARTMENT

DATE _____

NOTE:
This approval is void after 1 year from approval date. The City will not be responsible for errors and/or omissions on these plans.

Field conditions may dictate changes to these plans as determined by the City Engineer.

60 % REVIEW SUBMITTAL
NOT FOR CONSTRUCTION

REVISIONS	DATE	BY

DESIGNED J. WRIGHT
DRAWN E. SOTO
CHECKED
APPROVED

ONE INCH AT FULL SCALE. IF NOT, SCALE ACCORDINGLY
FILE NAME PS01895065-G
JOB No. 216-1895-065
DATE DECEMBER 2014

PRELIMINARY

RICKI V. HERMES
STATE OF WASHINGTON
12636
REGISTERED PROFESSIONAL ENGINEER

Parametrix
ENGINEERING . PLANNING . ENVIRONMENTAL SCIENCES
1019 39TH AVENUE SE, SUITE 100
PUYALLUP, WASHINGTON 98374
T. 253.604.6600 F. 253.604.6799
www.parametrix.com

PROJECT NAME
SALMON SPRINGS TRANSMISSION MAIN REPLACEMENT

TITE SHEET, LOCATION, SITE, VICINITY MAPS, AND INDEX TO DRAWINGS

SHEET NO. 1 OF X
G1

LAYOUT: G1 PATH: U:\PSO\Projects\Clients\1895-CityOfPuyallup\216-1895-065 Salmon Springs\99Svcs\CADD\DWG\ PLOTTED BY: clarkchr DATE: Monday, December 15, 2014 2:33:32 PM

CONSTRUCTION NOTES:

1. ALL PIPE AND FITTING JOINTS SHALL BE RESTRAINED. SEE SPECIFICATIONS.

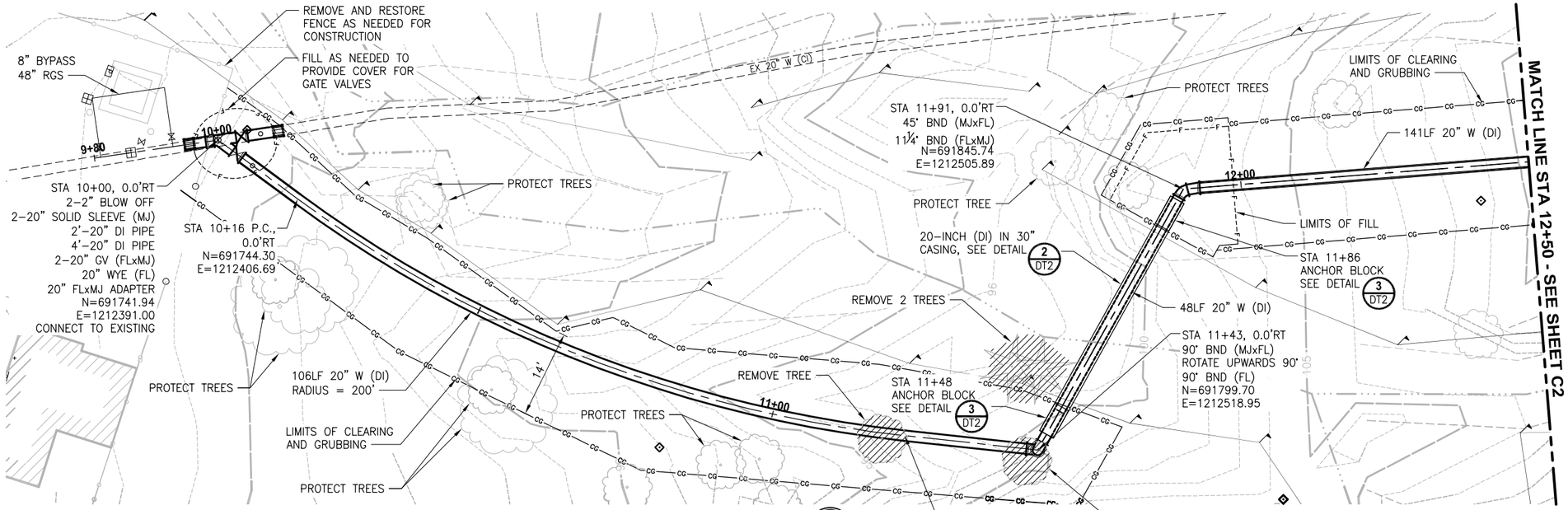

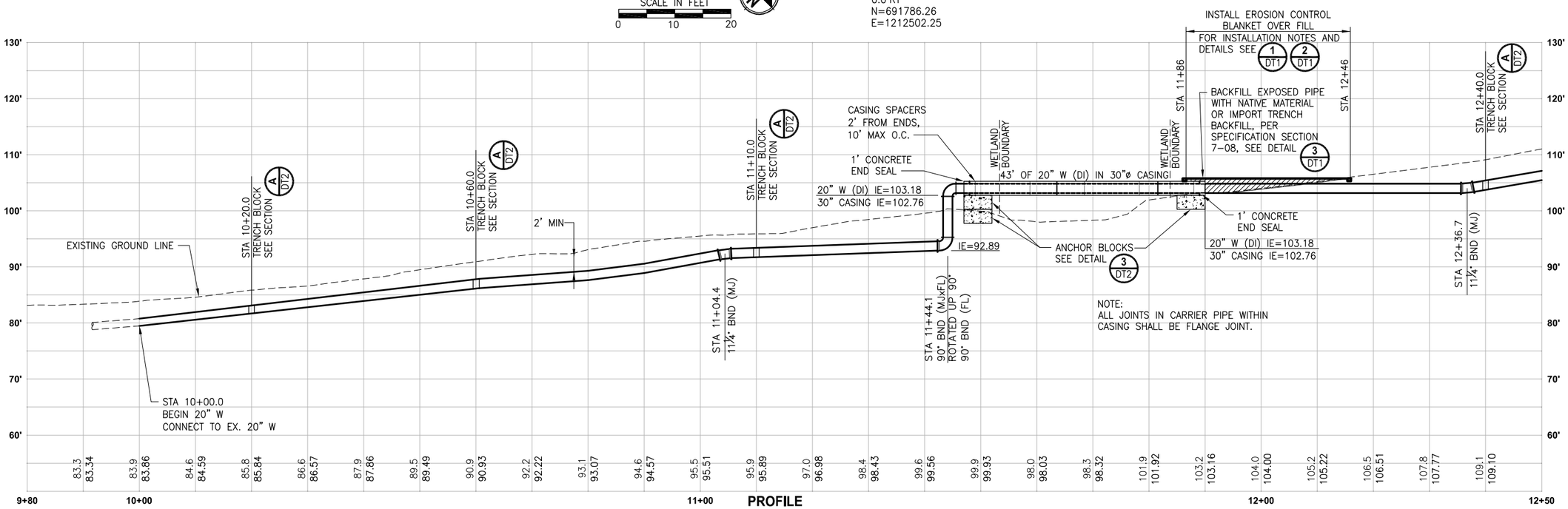

60 % REVIEW SUBMITTAL
NOT FOR CONSTRUCTION

PRELIMINARY

RICKY V. HERMES
STATE OF WASHINGTON
12636
REGISTERED PROFESSIONAL ENGINEER

REVISIONS	DATE	BY

DESIGNED R. HERMES
DRAWN C.D. CLARK
CHECKED
APPROVED

ONE INCH AT FULL SCALE. IF NOT, SCALE ACCORDINGLY
FILE NAME PSO1895065-C1
JOB No. 216-1895-065
DATE DECEMBER 2014

Parametrix
ENGINEERING . PLANNING . ENVIRONMENTAL SCIENCES
1019 39TH AVENUE SE, SUITE 100
PUYALLUP, WASHINGTON 98374
T. 253.604.6600 F. 253.604.6799
www.parametrix.com

PROJECT NAME
SALMON SPRINGS TRANSMISSION MAIN REPLACEMENT

SALMON SPRINGS WATER MAIN PLAN AND PROFILE STA 10+00 TO STA 12+50

SHEET NO. 4 OF X
C1

PATH: U:\PSO\Projects\Clients\1895-CityOfPuyallup\216-1895-065 Salmon Springs\99Svcs\CADD\DWG\ PLOTTED BY: clarkchr DATE: Monday, December 15, 2014 2:41:17 PM
LAYOUT: C1

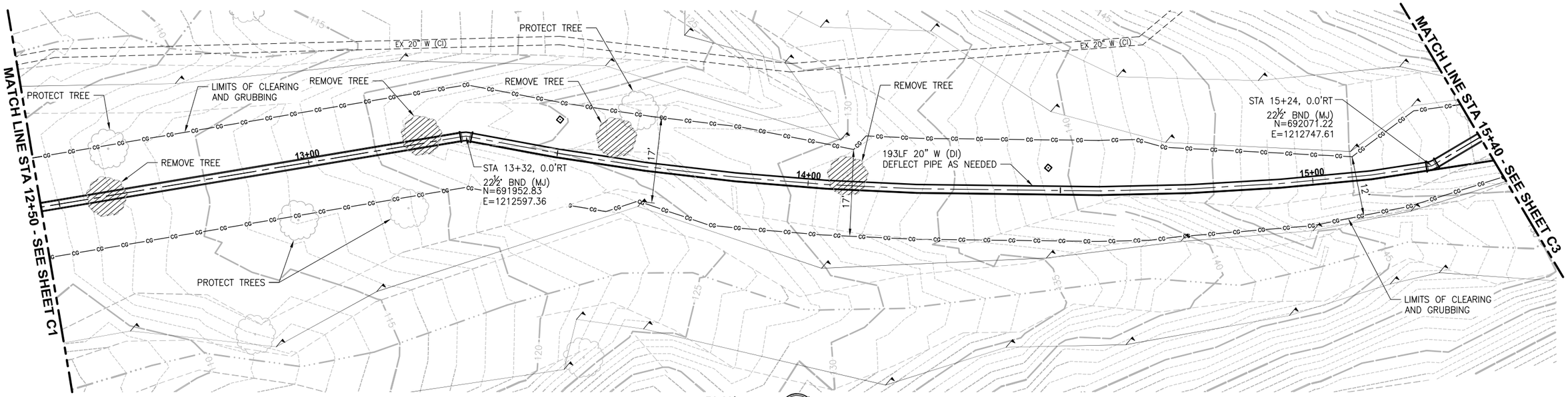

PLAN

SCALE IN FEET

0 10 20

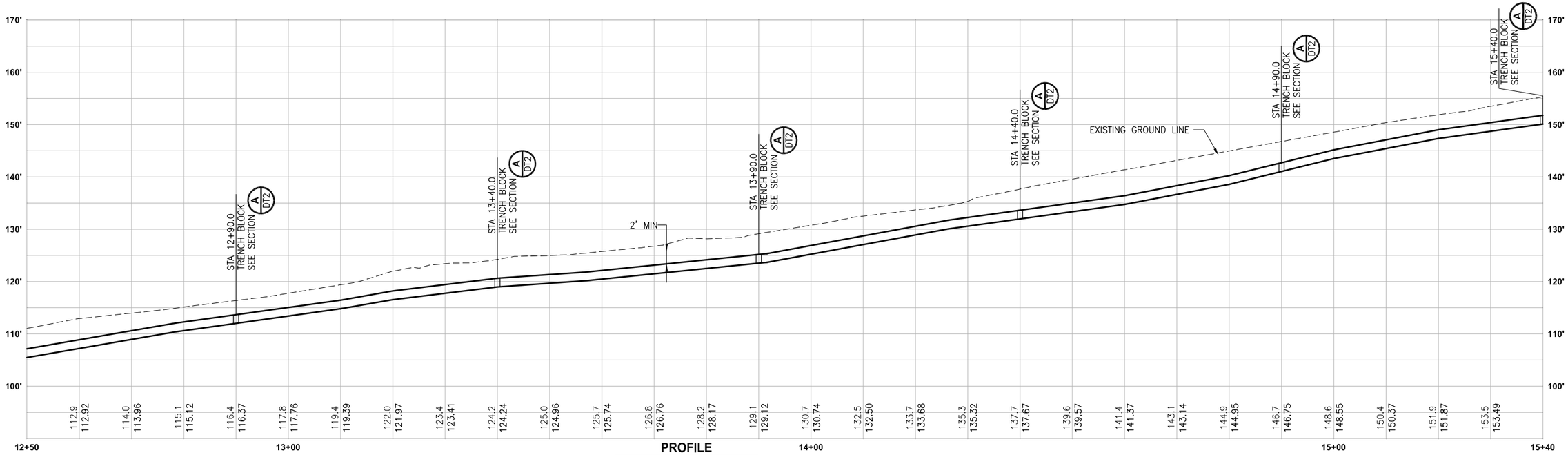

PROFILE

HORIZ: 1"=10'
VERT: 1"=10'

60 % REVIEW SUBMITTAL
NOT FOR CONSTRUCTION

PRELIMINARY

RICKY V. HERMES — STATE OF WASHINGTON — 12636 — REGISTERED PROFESSIONAL ENGINEER

	REVISIONS	DATE	BY	
				DESIGNED R. HERMES
				DRAWN C.D. CLARK
				CHECKED
				APPROVED

ONE INCH AT FULL SCALE. IF NOT, SCALE ACCORDINGLY

FILE NAME PS01895065-C1
JOB No. 216-1895-065
DATE DECEMBER 2014

Parametrix
ENGINEERING . PLANNING . ENVIRONMENTAL SCIENCES
1019 39TH AVENUE SE, SUITE 100
PUYALLUP, WASHINGTON 98374
T. 253.604.6600 F. 253.604.6799
www.parametrix.com

PROJECT NAME
SALMON SPRINGS
TRANSMISSION MAIN
REPLACEMENT

SALMON SPRINGS WATER MAIN PLAN AND PROFILE STA 12+40 TO STA 15+40

SHEET NO.
5 OF X

C2

PATH: U:\PSO\Projects\Clients\1895-CityOfPuyallup\216-1895-065 Salmon Springs\99Svca\CADD\DWG\ PLOTTED BY: clarkchr DATE: Monday, December 15, 2014 2:28:46 PM
LAYOUT: C2

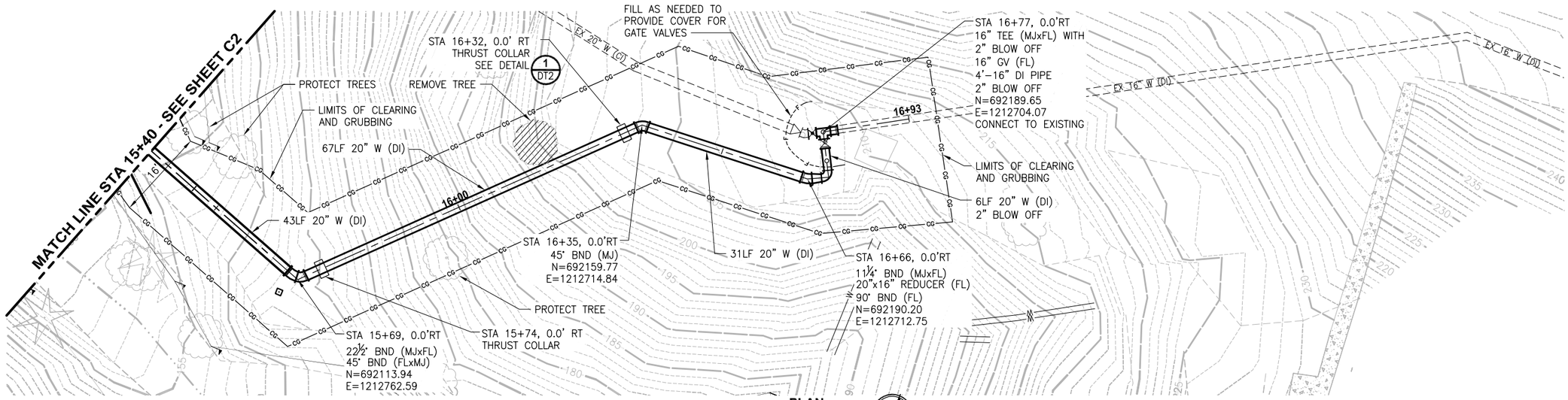

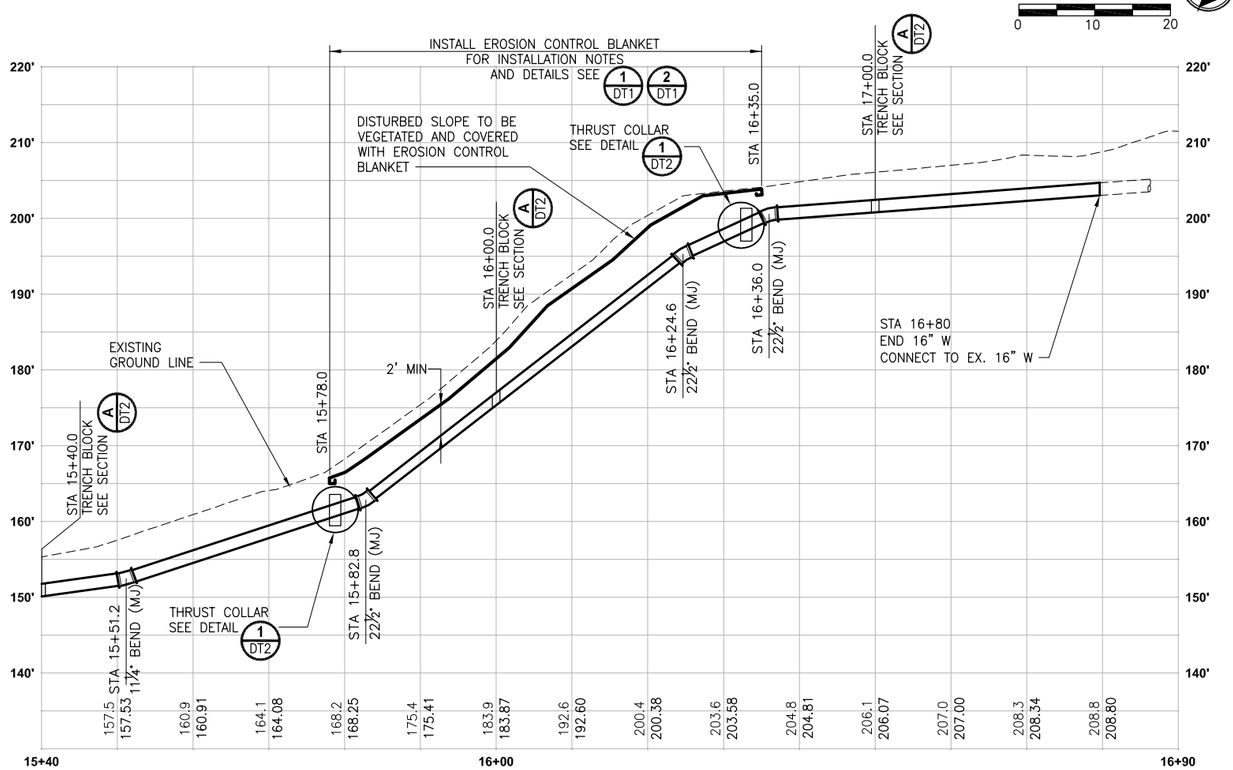

PROFILE

HORIZ: 1"=10'
VERT: 1"=10'

60 % REVIEW SUBMITTAL
NOT FOR CONSTRUCTION

PRELIMINARY

REVISIONS	DATE	BY

DESIGNED R. RAYMOND
DRAWN C.D. CLARK
CHECKED
APPROVED

ONE INCH AT FULL SCALE. IF NOT, SCALE ACCORDINGLY
FILE NAME PS01895065-C1
JOB No. 216-1895-065
DATE DECEMBER 2014

RICKI V. HERMES STATE OF WASHINGTON 12636 REGISTERED PROFESSIONAL ENGINEER

Parametrix
ENGINEERING . PLANNING . ENVIRONMENTAL SCIENCES
1019 39TH AVENUE SE, SUITE 100
PUYALLUP, WASHINGTON 98374
T. 253.604.6600 F. 253.604.6799
www.parametrix.com

PROJECT NAME
SALMON SPRINGS TRANSMISSION MAIN REPLACEMENT

SALMON SPRINGS WATER MAIN PLAN AND PROFILE STA 15+40 TO STA 17+77.82

SHEET NO. 6 OF X
C3

PATH: U:\PSO\Projects\Clients\1895-CityOfPuyallup\216-1895-065 Salmon Springs\99Svcs\CADD\DWG\ PLOTTED BY: clarkchr DATE: Monday, December 15, 2014 2:28:21 PM
LAYOUT: C3

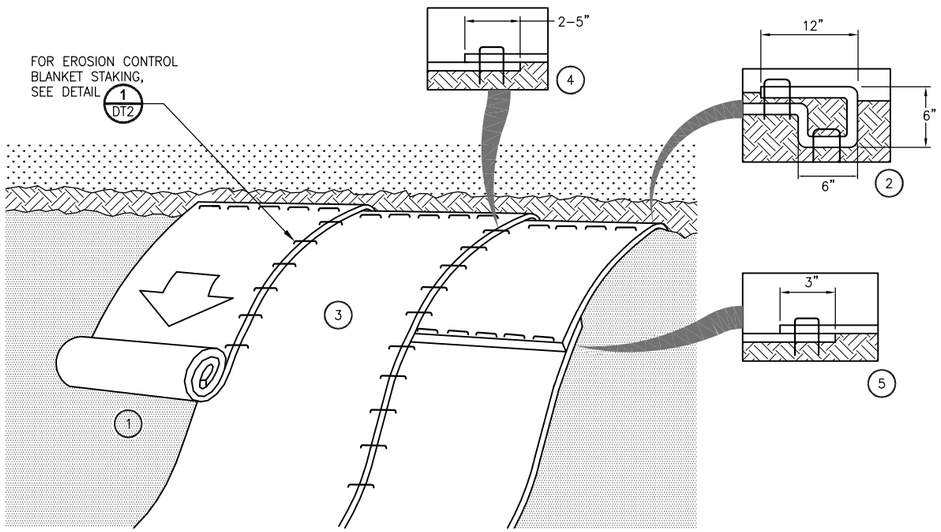

EROSION CONTROL BLANKET PLACEMENT
DETAIL 1 TYP
NO SCALE

EROSION CONTROL BLANKET INSTALLATION NOTES:

1. PLACEMENT OF TEMPORARY EROSION CONTROL BLANKET SHALL ONLY BE AFTER PLACEMENT OF SEED AND FERTILIZER. PLACEMENT SHALL BE PER MANUFACTURER'S RECOMMENDATIONS.
2. TEMPORARY EROSION CONTROL BLANKET SHALL BE INSTALLED FROM TOP OF SLOPE DOWN BY ANCHORING THE BLANKET IN A 6 INCH DEEP BY SIX INCH WIDE TRENCH WITH TWELVE INCHES OF BLANKET EXTENDED BEYOND THE UP–SLOPE PORTION OF THE TRENCH. BLANKET SHALL BE ANCHORED WITH A ROW OF STAPLES/STAKES TWELVE INCHES APART IN THE BOTTOM OF THE TRENCH. TRENCH SHALL BE BACKFILLED AND COMPACTED AFTER STAPLING. SEED SHALL BE APPLIED TO COMPACTED SOIL AND REMAINING TWELVE INCH PORTION OF BLANKET SHALL BED FOLDED BACK OVER SEED AND COMPACTED SOIL. BLANKET SHALL BE SECURED OVER COMPACTED SOIL WITH A ROW OF STAPLES/STAKES SPACED TWELVE INCHES APART ACROSS THE WIDTH OF THE BLANKET.
3. BLANKETS SHALL BE ROLLED DOWN THE SLOPE. ALL BLANKETS SHALL BE SECURELY FASTENED TO THE SOIL SURFACE BY PLACING STAPLES/STAKES IN LOCATIONS AS SHOWN IN DETAIL 2 –.
4. THE EDGES OF PARALLEL BLANKETS MUST BE STAPLED WITH A MINIMUM OF 6 INCHES OF OVERLAP OR AS RECOMMENDED BY MANUFACTURER.
5. CONSECUTIVE BLANKETS SHALL BE SPLICED END OVER END (SHINGLE STYLE) WITH A MINIMUM OF 6 INCHES OF OVERLAP. STAPLES SHALL BE PLACED THROUGH OVERLAPPED AREA AT A TWELVE INCH SPACING ACROSS THE ENTIRE BLANKET WIDTH.
6. IN FIRM SOIL CONDITIONS, STAPLES OR STAKES SHALL BE A MINIMUM OF SIX INCHES IN LENGTH. IN LOOSE SOIL CONDITIONS, STAPLES OR STAKES SHALL BE A MINIMUM OF 12 INCHES IN LENGTH OR AS NECESSARY TO PROPERLY SECURE THE BLANKETS.
7. WIDTH OR EROSION CONTROL BLANKET IS WIDTH OF DISTURBED SLOPE (~20').

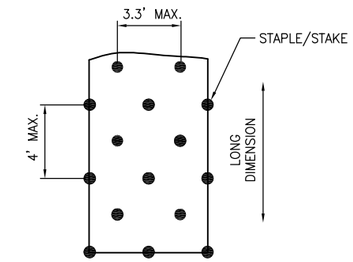

EROSION CONTROL BLANKET STAKING
DETAIL 2 –
NO SCALE

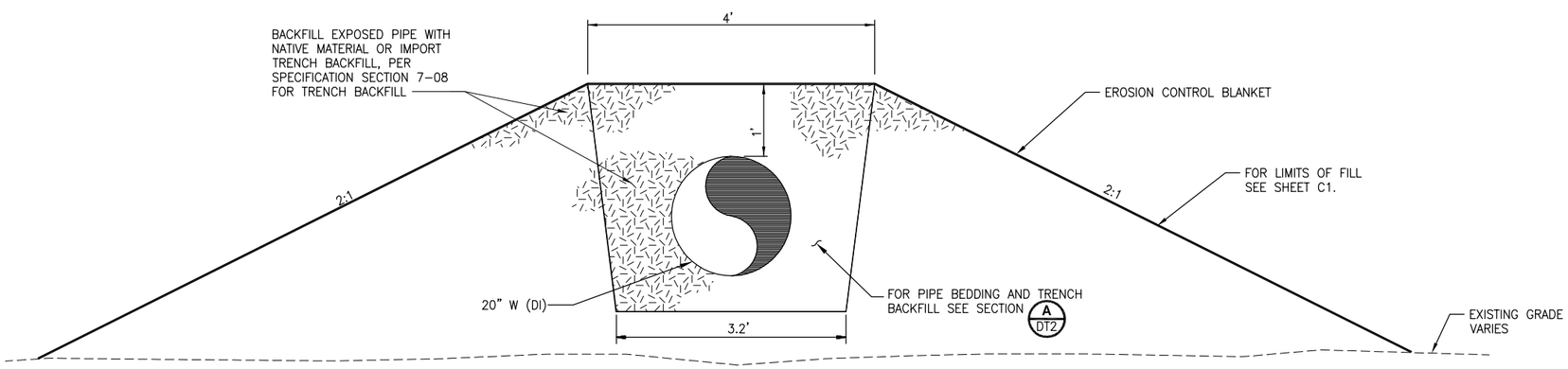

EXPOSED PIPE BACKFILL
DETAIL 3 TYP
NO SCALE

60 % REVIEW SUBMITTAL
NOT FOR CONSTRUCTION

	REVISIONS	DATE	BY	
				DESIGNED R. HERMES
				DRAWN C.D. CLARK
				CHECKED
				APPROVED

ONE INCH AT FULL SCALE. IF NOT, SCALE ACCORDINGLY
FILE NAME PS01895065–DT1
JOB No. 216–1895–065
DATE DECEMBER 2014

PRELIMINARY — RICKI V. HERMES, STATE OF WASHINGTON, 13836, REGISTERED PROFESSIONAL ENGINEER

Parametrix
ENGINEERING . PLANNING . ENVIRONMENTAL SCIENCES
1019 39TH AVENUE SE, SUITE 100
PUYALLUP, WASHINGTON 98374
T. 253.604.6600 F. 253.604.6799
www.parametrix.com

PROJECT NAME
SALMON SPRINGS TRANSMISSION MAIN REPLACEMENT

MISCELLANEOUS DETAILS

SHEET NO. 7 OF X
DT1

LAYOUT: DT1 PATH: U:\PSO\Projects\Clients\1895–CityOfPuyallup\216–1895–065 Salmon Springs\995\ca\CADD\DWG\ PLOTTED BY: clarkchr DATE: Monday, December 15, 2014 2:27:41 PM

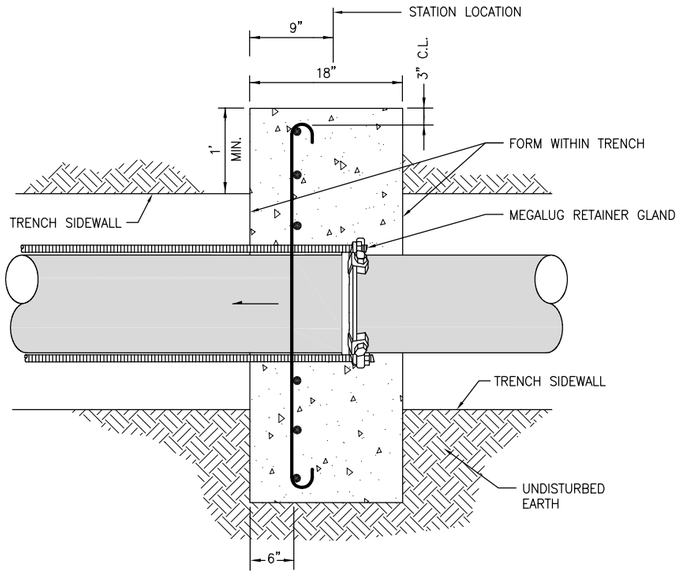

TOP SECTION VIEW
NOT TO SCALE

THRUST COLLAR NOTES:

1. CONCRETE SHALL BE 3000 PS COMMERCIAL CONCRETE.
2. REINFORCING BARS SHALL BE DEFORMED BARS AND TIED TOGETHER.
3. PLACE THRUST COLLAR ON ONE FULL JOINT OF PIPE.
4. FORMWORK AT FACE OF ANCHOR WALLS MUST BE REMOVED. BACKFILL AT FACE OF ANCHOR WALL MUST BE COMPACTED TO 95% MAX DRY DENSITY BASED ASTM D1557 PRIOR TO REINSTATING SERVICE OF THE WATER MAIN.

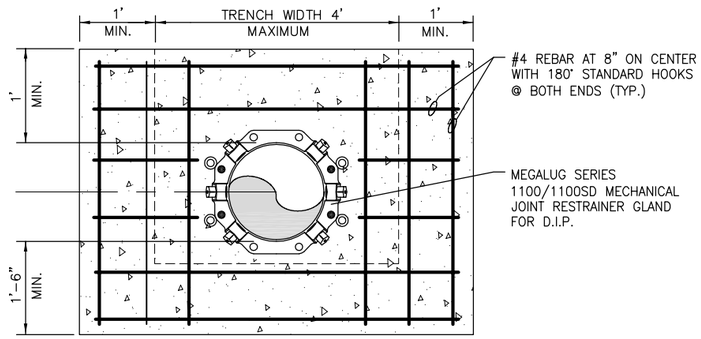

ELEVATION VIEW
NOT TO SCALE

THRUST COLLAR & BLOCKING WITH MEGALUG RETAINER GLAND
DETAIL 1
NO SCALE

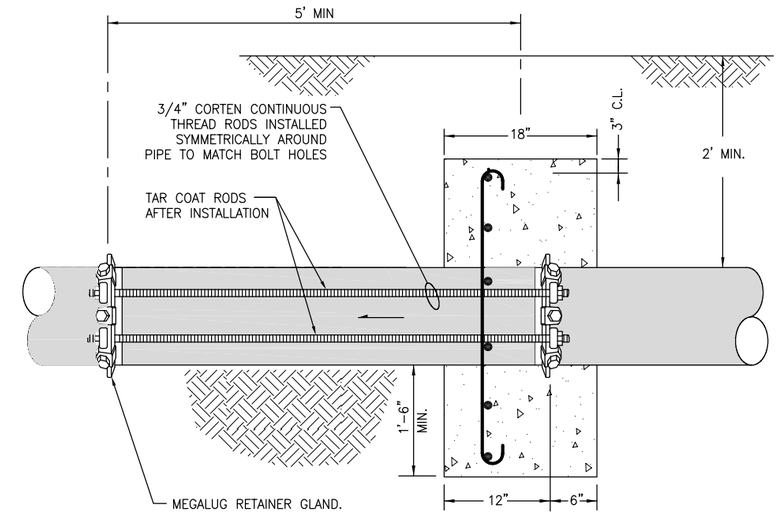

SIDE SECTION VIEW
NOT TO SCALE

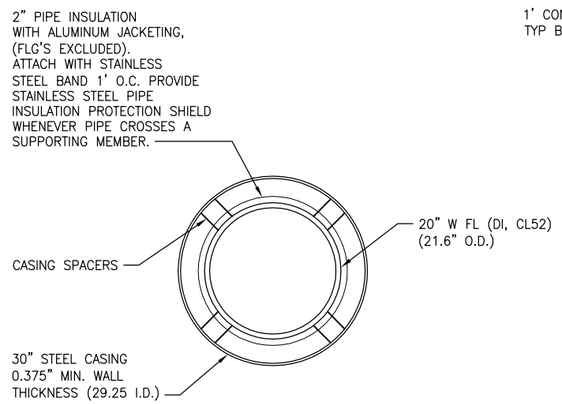

NOTE:
ALL PIPE JOINTS IN CASING SHALL BE FLANGE JOINT.

20" W (DI) IN 30" STEEL CASING
DETAIL 2
1"=1'-0" TYP

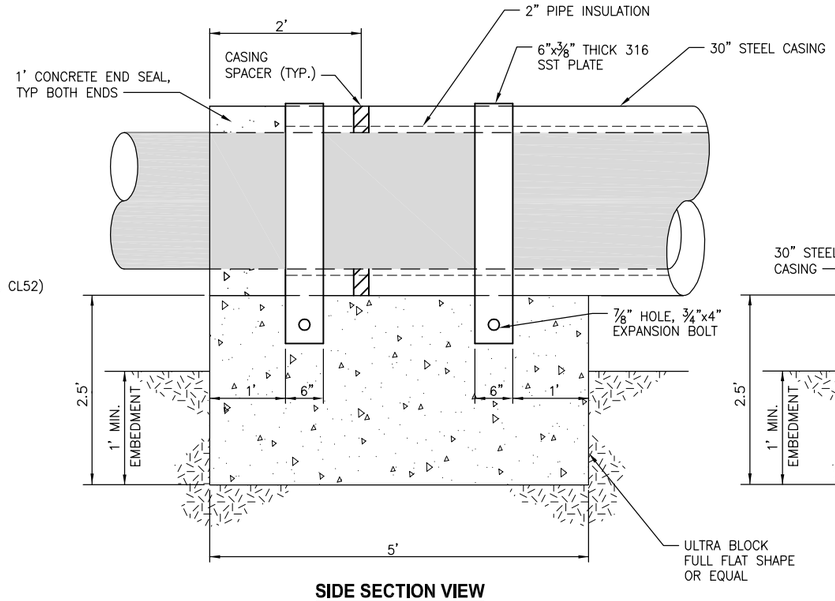

SIDE SECTION VIEW
NOT TO SCALE

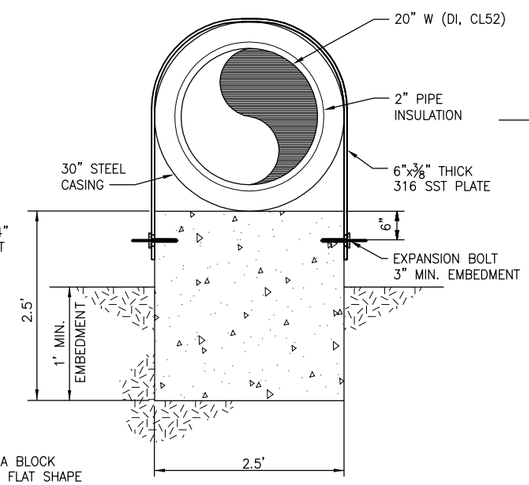

ELEVATION VIEW
NOT TO SCALE

ULTRA BLOCK-FULL FLAT ANCHOR BLOCK
DETAIL 3
NO SCALE

TRENCH BACKFILL NOTES:

1. SELECT NATIVE MATERIAL (1" MINUS) OR CSTC PER SPECIFICATION SECTION 9-03.9(3).
2. FOR TRENCH BLOCK, PLACE BEDDING AMENDED WITH 10% POWDERED SODIUM BENTONITE BY VOLUME FOR 2LF OF TRENCH.

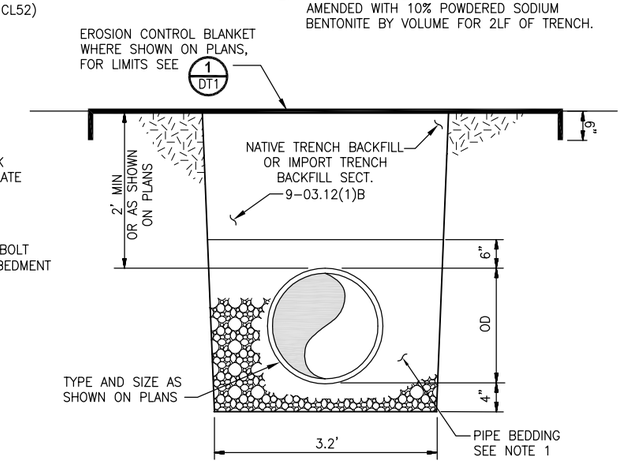

TYPICAL WATER TRENCH BACKFILL
SECTION A
NO SCALE TYP

60 % REVIEW SUBMITTAL
NOT FOR CONSTRUCTION

	REVISIONS	DATE	BY	DESIGNED R. HERMES
				DRAWN C.D. CLARK
				CHECKED
				APPROVED

ONE INCH AT FULL SCALE. IF NOT, SCALE ACCORDINGLY
FILE NAME PS01895065-DT1
JOB No. 216-1895-065
DATE DECEMBER 2014

PRELIMINARY
RICKY V. HERMES STATE OF WASHINGTON 42636 REGISTERED PROFESSIONAL ENGINEER

Parametrix
ENGINEERING . PLANNING . ENVIRONMENTAL SCIENCES
1019 39TH AVENUE SE, SUITE 100
PUYALLUP, WASHINGTON 98374
T. 253.604.6600 F. 253.604.6799
www.parametrix.com

PROJECT NAME
SALMON SPRINGS TRANSMISSION MAIN REPLACEMENT

MISCELLANEOUS DETAILS

SHEET NO.
8 OF X
DT2

PATH: U:\PSO\Projects\Clients\1895-CityOfPuyallup\216-1895-065 Salmon Springs\99Svcs\CADD\DWG\ PLOTTED BY: clarkchr DATE: Monday, December 15, 2014 2:44:15 PM
LAYOUT: DT2