MAPLE LAWN ELEMENTARY SCHOOL PARKING EXPANSION

A PORTION OF THE SE 1/4 OF THE NE 1/4 OF SEC. 25, TWN. 20 N., RGE. 04 E. W.M.
CITY OF SUMNER, PIERCE COUNTY, WASHINGTON.

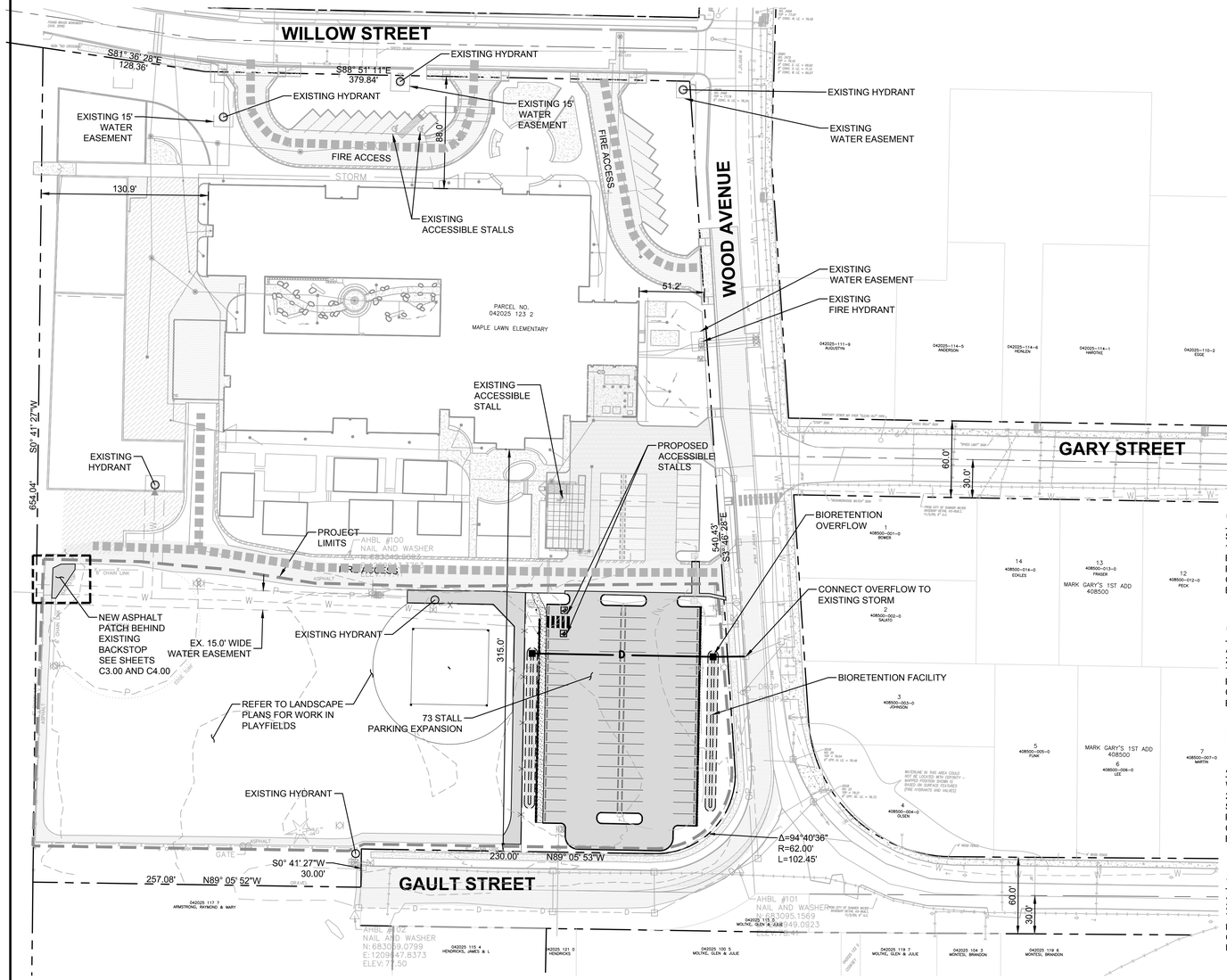

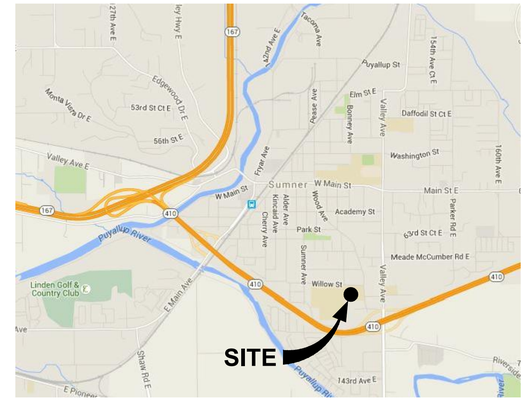

VICINITY MAP
NOT TO SCALE

N

GRAPHIC SCALE
0 25 50 100
1" = 50 FEET

OWNER/APPLICANT
SUMNER SCHOOL DISTRICT
19701 104TH STREET EAST
BONNEY LAKE, WA 98390-7948
PHONE: (253) 891-6300
CONTACT: MR. MARK BAUMGARTEN
EMAIL: mark.baumgarten@sumnersd.org

CIVIL ENGINEER
AHBL INC.
2215 NORTH 30TH STREET, SUITE 300
TACOMA, WA 98403
PHONE: (253) 383-2422
CONTACT: NICK RHEAUME
EMAIL: nrheaume@ahbl.com

LANDSCAPE ARCHITECT
WEISMAN DESIGN GROUP
2329 E. MADISON STREET
SEATTLE , WA 98112
PHONE: (206) 322-1732
CONTACT: ANDY RASMUSSEN
EMAIL: andy@wdginc.com

SURVEYOR
AHBL INC.
2215 NORTH 30TH STREET, SUITE 300
TACOMA, WA 98403
PHONE: (253) 383-2422
CONTACT: DAVID FOLLANSBEE, PLS
EMAIL: dfollansbee@ahbl.com

SITE ADDRESS
230 WOOD AVE
SUMNER, WA 98390

PARCEL DATA
ZONING: LOW DENSITY RESIDENTIAL 12,000

FLOOD ZONE: X - SITE DETERMINED TO BE OUTSIDE THE 500 YEAR FLOOD PLAIN.

PARKING COUNT

EXISTING:	42
EXISTING ADA:	3
PROPOSED:	71
PROPOSED ADA:	2
TOTAL:	118

EXISTING LEGEND:

- SET NAIL AND WASHER
- FOUND MONUMENT AS NOTED
- HUB AND TACK
- SET REBAR AND CAP
- BOLLARD
- MAIL BOX
- SIGN
- SANITARY SEWER MANHOLE
- SANITARY SEWER CLEANOUT
- STORM CATCH BASIN
- STORM MANHOLE
- ROOF DRAIN
- GAS METER
- GAS VALVE
- TRAFFIC SIGNAL POLE
- TRAFFIC CABINET
- POWER TRANSFORMER
- GUY ANCHOR
- UTILITY POWER POLE
- ELECTRICAL VAULT
- JUNCTION BOX
- POWER METER
- LUMINAIRE
- TELEPHONE RISER
- TELEPHONE VAULT
- FIRE DEPARTMENT CONNECTION
- FIRE HYDRANT
- IRRIGATION CONTROL VALVE
- HOSE BIB
- WATER METER
- WATER VALVE
- WATER VAULT
- A=APPLE, B=BIRCH, F=FIR, P=PINE, HA=HAWTHORNE
- HO=HOLLY, M=MAPLE, O=OAK, U= UNKNOWN
- D — STORM LINE
- S — SANITARY SEWER LINE
- G — GAS LINE
- P — ELECTRICAL LINE
- T — COMMUNICATIONS LINE
- W — WATER LINE
- I — IRRIGATION PER RECORD DRAWING
- OP — OVERHEAD UTILITIES
- V — STEAM LINE
- x — x — x — x — x — FENCE
- CONCRETE
- ASPHALT
- XXX — CONTOUR MAJOR INTERVAL
- XXX — CONTOUR MINOR INTERVAL
- PROPERTY/RIGHT-OF-WAY LINE

UTILITY NOTE
THE LOCATIONS OF EXISTING UNDERGROUND UTILITIES ARE APPROXIMATE ONLY AND HAVE NOT BEEN INDEPENDENTLY VERIFIED BY THE OWNER OR ITS REPRESENTATIVE. THE CONTRACTOR SHALL DETERMINE THE EXACT LOCATION OF ALL EXISTING UTILITIES BEFORE COMMENCING WORK AND AGREES TO BE FULLY RESPONSIBLE FOR ANY AND ALL DAMAGES THAT INCUR DUE TO THE CONTRACTOR'S FAILURE TO LOCATE EXACTLY AND PRESERVE ANY AND ALL UNDERGROUND UTILITIES. AHBL ASSUMES NO LIABILITY FOR THE LOCATION OF UNDERGROUND UTILITIES.

AUTOCAD FILE
AN AUTOCAD DRAWING FILE IS AVAILABLE TO ASSIST WITH SITE LAYOUT. PLEASE NOTE THAT ELECTRONIC FILES ARE PROVIDED FOR CONTRACTOR'S CONVENIENCE AND SHALL NOT REPLACE NOR BE USED TO SUBSTITUTE THE CONTRACT DOCUMENTS. THE CONTRACTOR IS RESPONSIBLE FOR PROJECT LAYOUT ACCORDING TO CONTRACT DOCUMENTS AND COST FOR ELECTRONIC AUTOCAD FILES.
PHONE: (253) 383-2422
FAX: (253) 383-2572
CONTACT: NICK RHEAUME

FILL SPECIFICATION
FILL MATERIAL SHALL NOT CONTAIN PETROLEUM PRODUCTS, OR SUBSTANCES WHICH ARE HAZARDOUS, DANGEROUS, TOXIC, OR WHICH OTHERWISE VIOLATE ANY STATE, FEDERAL, OR LOCAL LAW, ORDINANCE, CODE, REGULATION, RULE, ORDER, OR STANDARD.

TRENCH NOTE
IF WORKERS ENTER ANY TRENCH OR OTHER EXCAVATION FOUR OR MORE FEET IN DEPTH THAT DOES NOT MEET THE OPEN PIT REQUIREMENTS OF WSDOT SECTION 2-09.3(3)B, IT SHALL BE SHORED AND CRIBBED. THE CONTRACTOR ALONE SHALL BE RESPONSIBLE FOR WORKER SAFETY AND AHBL ASSUMES NO RESPONSIBILITY. ALL TRENCH SAFETY SYSTEMS SHALL MEET THE REQUIREMENTS OF THE WASHINGTON INDUSTRIAL SAFETY AND HEALTH ACT, CHAPTER 49.17 RCW. CHAPTER 49.17 RCW.

TOPOGRAPHIC NOTE
THE EXISTING CULTURAL AND TOPOGRAPHIC DATA SHOWN ON THESE DRAWINGS HAS BEEN PREPARED, IN PART, BASED UPON INFORMATION FURNISHED BY OTHERS. WHILE THIS INFORMATION IS BELIEVED TO BE RELIABLE, AHBL CANNOT ENSURE ACCURACY AND THUS IS NOT RESPONSIBLE FOR THE ACCURACY OF THAT INFORMATION OR FOR ANY ERRORS OR OMISSIONS WHICH MAY HAVE BEEN INCORPORATED INTO THESE DRAWINGS AS A RESULT.

BASIS OF BEARING
NAD 1983
WASHINGTON STATE PLANE SOUTH PROJECTION, BASED ON GPS OBSERVATIONS USING WSRN AND GEOID 2012A. UNITS OF MEASUREMENT ARE US SURVEY FEET.

VERTICAL DATUM
NAVD 1988 VERTICAL DATUM ON ORTHOMETRICALLY CORRECTED GPS OBSERVATIONS USING WSRN AND GEOID 2012A.

SHEET INDEX

SHEET NUMBER	SHEET TITLE
C1.00	COVER SHEET
C2.00	TESC AND DEMOLITION PLAN
C2.01	TESC NOTES AND DETAILS
C3.00	GRADING AND STORM DRAINAGE PLAN
C3.01	STORM DRAINAGE NOTES AND DETAILS
C3.02	RAINGARDEN SECTIONS
C4.00	HORIZONTAL CONTROL AND PAVING PLAN
C4.01	PAVING NOTES AND DETAILS

Know what's **below.** **Call** before you dig.

AHBL
TACOMA · SEATTLE · SPOKANE · TRI-CITIES
2215 North 30th Street, Suite 300, Tacoma, WA 98403
253.383.2422 TEL 253.383.2572 FAX www.ahbl.com WEB

Project Title:

MAPLE LAWN ELEMENTARY SCHOOL PARKING EXPANSION

Client:
SUMNER SCHOOL DISTRICT
19701 104th STREET EAST
BONNEY LAKE, WA 98390-7948

Job No.
2160179.10

Issue Set & Date:
PERMIT SET
MAY 27 2016

DOREEN S. GAVIN
STATE OF WASHINGTON
23467
REGISTERED PROFESSIONAL ENGINEER
05/27/2016

NOTICE
ALTERATION OF THIS DOCUMENT SHALL INVALIDATE THE PROFESSIONAL SEAL AND SIGNATURE. PUBLICATION OF THIS DOCUMENT DOES NOT DEROGATE FROM RESERVED OWNERSHIP RIGHTS IN IT. THIS DOCUMENT IS FOR USE ONLY FOR THE PROJECT IDENTIFIED IN THE TITLE BLOCK AND IS NOT TO BE USED FOR REPAIR, REMODEL OR ADDITION TO THAT PROJECT OR FOR ANY OTHER PROJECT.

4
3
2
1
Revisions:

Sheet Title:
COVER SHEET

Designed by:	Drawn by:	Checked by:
N. RHEAUME	M. STEWART	D. GAVIN

Sheet No.
C1.00
1 of 8 Sheets

DATE: May 27, 2016 FILENAME: Q:\2016\2160179\10_CIV\CAD\2160179-SH-COVER.dwg

MAPLE LAWN ELEMENTARY SCHOOL PARKING EXPANSION

A PORTION OF THE SE 1/4 OF THE NE 1/4 OF SEC. 25, TWN. 20 N., RGE. 04 E. W.M.
CITY OF SUMNER, PIERCE COUNTY, WASHINGTON.

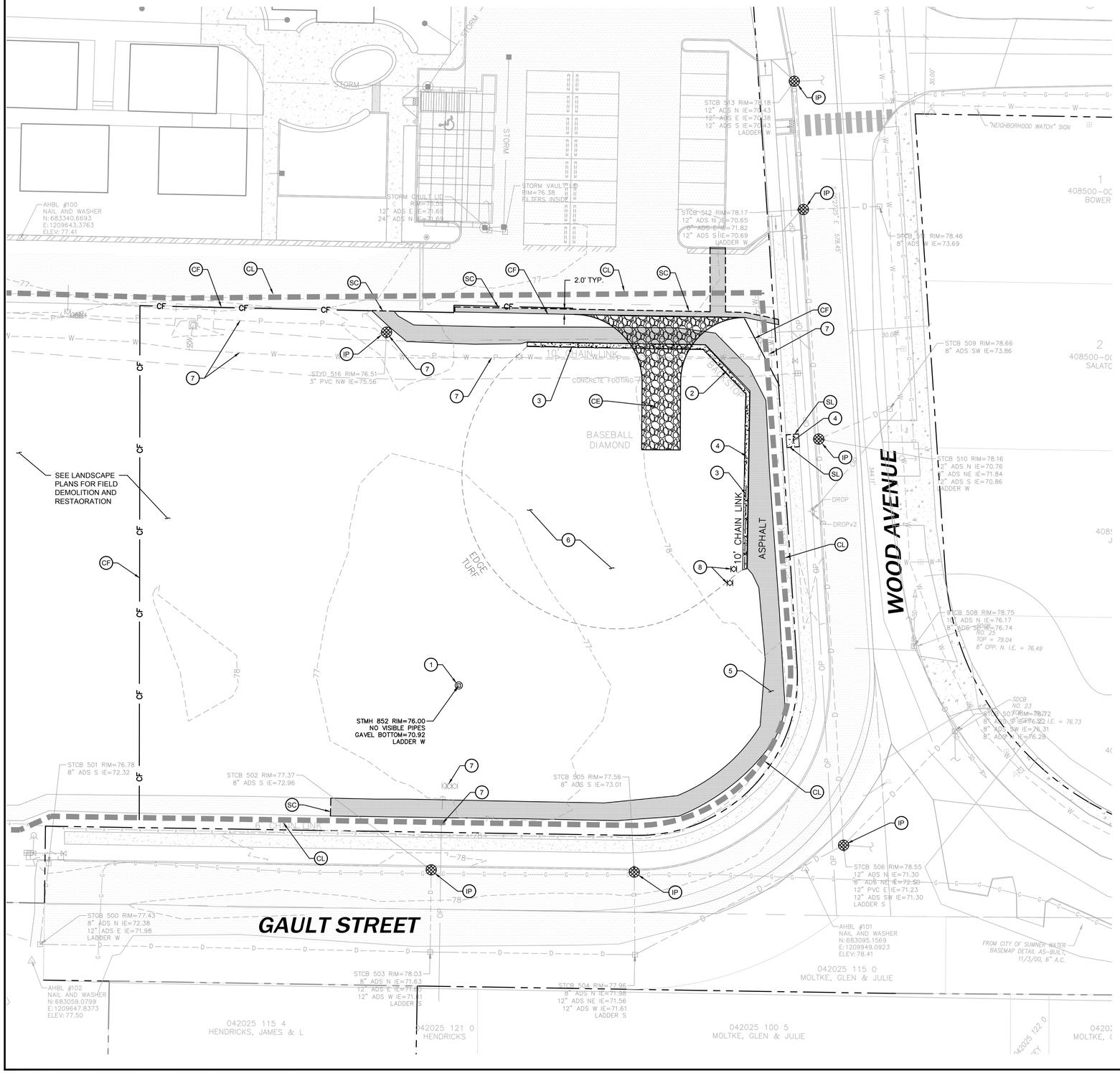

TESC NOTES:

1. INSTALL CATCH BASIN INLET PROTECTION IN ALL NEW CATCH BASINS AS SOON AS THEY ARE INSTALLED.
2. CONTRACTOR SHALL SWEEP ALL PAVED AREAS AT PROJECT COMPLETION.
3. REMOVE ALL INLET PROTECTION AT COMPLETION OF PROJECT.
4. CONTRACTOR SHALL PROVIDE TEMPORARY CONSTRUCTION FENCING FOR DURATION OF CONSTRUCTION. FENCING SHALL BE 6 FOOT HIGH CHAIN LINK.

DEMOLITION NOTES:

1. PROTECT ALL EXISTING IMPROVEMENTS NOT SPECIFICALLY SHOWN FOR DEMOLITION. CONTRACTOR SHALL CORRECT ANY UNAUTHORIZED DEMOLITION AT NO ADDITIONAL COST TO THE OWNER.
2. DEMOLITION: IT IS THE INTENT OF THE WORK UNDER THIS CONTRACT TO INCLUDE THE DEMOLITION OF ALL EXISTING BUILDINGS, PAVING, UTILITIES AND OTHER EXISTING SITE IMPROVEMENTS INCLUDING THEIR UNDERGROUND COMPONENTS AS INDICATED BY THIS DRAWING AND AS REQUIRED FOR NEW CONSTRUCTION. IT IS THE CONTRACTOR'S RESPONSIBILITY TO FULLY REVIEW THE SITE CONDITIONS AND TO CORRELATE THESE OBSERVATIONS WITH THE PROJECT WORK AND INCLUDE ALL NECESSARY DEMOLITION, WHETHER SHOWN OR NOT, AND INCLUDE ALL SUCH COSTS IN THE BASE BID.
3. CLEARING AND DEMOLITION: IT IS THE INTENT OF THE WORK UNDER THIS CONTRACT TO CONDUCT ALL CLEARING AND DEMOLITION NECESSARY TO BE ABLE TO COMPLETE ALL THE WORK OF THIS PROJECT.
4. CONTRACTOR SHALL LEGALLY DISPOSE OF THE OWNER'S PROPERTY AND ALL DEMOLISHED AND REMOVED MATERIALS, IN AN OFF-SITE LOCATION, UNLESS INDICATED OTHERWISE.
5. IT IS THE RESPONSIBILITY OF THE CONTRACTOR TO COMPLETELY COORDINATE UTILITY DEMOLITION WITH NEW CONSTRUCTION. CONTRACTOR SHALL ENSURE THAT ADEQUATE FIRE PROTECTION IN ACCORDANCE WITH THE FIRE MARSHALL REQUIREMENTS IS PROVIDED FOR THE BUILDING AND CAMPUS DURING CONSTRUCTION.
6. COORDINATE POWER DEMOLITION WITH ELECTRICAL PLANS. CONTRACTOR TO ENSURE THAT DEMOLITION OF LINES WILL NOT COMPROMISE POWER TO OTHER AREAS OF THE CAMPUS.
7. CONTRACTOR SHALL MINIMIZE DUST GENERATION ONSITE BY SPRINKLING THE SITE WITH WATER UNTIL SURFACE IS WET. SEE BMP C140.
8. SAWCUT CONCRETE SIDEWALK AT THE NEAREST JOINT. ASPHALT SAWCUTS SHALL BE NEATLINE. JAGGED AND SPALLING EDGES WILL NOT BE ACCEPTED.
9. SEE LANDSCAPE PLANS FOR IRRIGATION DEMOLITION.

TESC LEGEND:

- IP — INLET PROTECTION (1 / C2.01)
- CL — CLEARING/PROJECT LIMITS
- CF — TEMPORARY CONSTRUCTION FENCE
- CE — CONSTRUCTION ENTRANCE (2 / C2.01)

DEMOLITION LEGEND:

- DEMOLISH EXISTING CONCRETE
- DEMOLISH EXISTING ASPHALT
- SL — SAWCUT LINE

DEMOLITION KEYNOTES:

1. DEMOLISH EXISTING CATCH BASIN.
2. DEMOLISH EXISTING BACKSTOP.
3. DEMOLISH EXISTING FENCE.
4. DEMOLISH EXISTING CONCRETE.
5. DEMOLISH EXISTING ASPHALT.
6. DEMOLISH EXISTING INFIELD. SEE LANDSCAPE PLANS.
7. PROTECT EXISTING UTILITY TO REMAIN.
8. DEMOLISH EXISTING IRRIGATION.

N

GRAPHIC SCALE
0 10 20 40
1" = 20 FEET

Know what's below. Call before you dig.

AHBL
TACOMA · SEATTLE · SPOKANE · TRI-CITIES
2215 North 30th Street, Suite 300, Tacoma, WA 98403
253.383.2422 TEL 253.383.2572 FAX www.ahbl.com WEB

Project Title:

MAPLE LAWN ELEMENTARY SCHOOL PARKING EXPANSION

Client:

SUMNER SCHOOL DISTRICT

19701 104th STREET EAST
BONNEY LAKE, WA 98390-7948

Job No.

2160179.10

Issue Set & Date:

PERMIT SET

MAY 27 2016

DOREEN S. GAVIN
STATE OF WASHINGTON
23467
REGISTERED PROFESSIONAL ENGINEER
05/27/2016

NOTICE
ALTERATION OF THIS DOCUMENT SHALL INVALIDATE THE PROFESSIONAL SEAL AND SIGNATURE. PUBLICATION OF THIS DOCUMENT DOES NOT DERROGATE FROM RESERVED OWNERSHIP RIGHTS IN IT. THIS DOCUMENT IS FOR USE ONLY FOR THE PROJECT IDENTIFIED IN THE TITLE BLOCK. ANY USE OF THIS DOCUMENT FOR ANY OTHER PURPOSE IN ADDITION TO THAT PROJECT OR FOR ANY OTHER PROJECT.

4
3
2
1
Revisions:

Sheet Title:

TESC AND DEMOLITION PLAN

Designed by:	Drawn by:	Checked by:
N. RHEAUME	M. STEWART	D. GAVIN

Sheet No.

C2.00

2 of 8 Sheets

DATE: May 24, 2016 FILENAME: Q:\2016\2160179\10_CIV\CAD\2160179-SH-DEMO-TESC.dwg

MAPLE LAWN ELEMENTARY SCHOOL PARKING EXPANSION

A PORTION OF THE SE 1/4 OF THE NE 1/4 OF SEC. 25, TWN. 20 N., RGE. 04 E. W.M.
CITY OF SUMNER, PIERCE COUNTY, WASHINGTON.

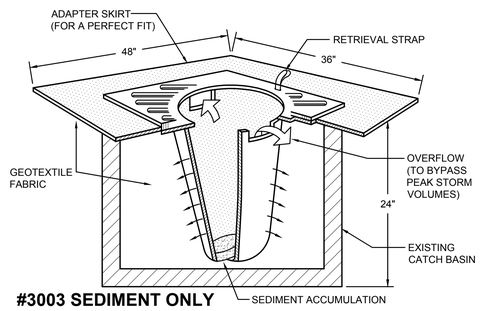

1 INLET SEDIMENT PROTECTION
NOT TO SCALE

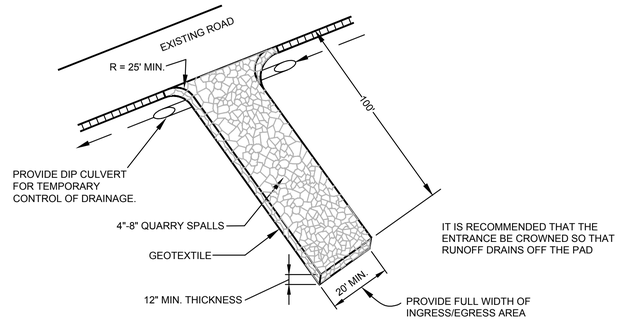

MAINTENANCE STANDARDS

1. QUARRY SPALLS (OR HOG FUEL) SHALL BE ADDED IF THE PAD IS NO LONGER IN ACCORDANCE WITH THE SPECIFICATIONS.
2. IF THE ENTRANCE IS NOT PREVENTING SEDIMENT FROM BEING TRACKED ONTO PAVEMENT, THEN ALTERNATIVE MEASURES TO KEEP THE STREETS FREE OF SEDIMENT SHALL BE USED. THIS MAY INCLUDE STREET SWEEPING, AN INCREASE IN THE DIMENSIONS OF THE ENTRANCE, OR THE INSTALLATION OF A WHEEL WASH. IF WASHING IS USED, IT SHALL BE DONE ON AN AREA COVERED WITH CRUSHED ROCK, AND WASH WATER SHALL DRAIN TO A SEDIMENT TRAP OR POND.
3. ANY SEDIMENT THAT IS TRACKED ONTO PAVEMENT SHALL BE REMOVED IMMEDIATELY BY SWEEPING. THE SEDIMENT COLLECTED BY SWEEPING SHALL BE REMOVED OR STABILIZED ON-SITE. THE PAVEMENT SHALL NOT BE CLEANED BY WASHING DOWN THE STREET, EXCEPT WHEN SWEEPING IS INEFFECTIVE AND THERE IS A THREAT TO PUBLIC SAFETY. IF IT IS NECESSARY TO WASH THE STREETS, THE CONSTRUCTION OF A SMALL SUMP SHALL BE CONSIDERED. THE SEDIMENT WOULD THEN BE WASHED INTO THE SUMP.
4. ANY QUARRY SPALLS THAT ARE LOOSENED FROM THE PAD AND END UP ON THE ROADWAY SHALL BE REMOVED IMMEDIATELY.
5. IF VEHICLES ARE ENTERING OR EXITING THE SITE AT POINTS OTHER THAN THE CONSTRUCTION ENTRANCE(S), FENCING SHALL BE INSTALLED TO CONTROL TRAFFIC.

2 CONSTRUCTION ENTRANCE
NOT TO SCALE

TESC NOTES:

1. APPROVAL OF THIS STORMWATER SITE PLAN DOES NOT CONSTITUTE AN APPROVAL OF PERMANENT ROAD OR DRAINAGE DESIGN.
2. THE IMPLEMENTATION OF THESE TESC BMPS AND THE CONSTRUCTION, MAINTENANCE, REPLACEMENT, AND UPGRADING OF THESE TESC FACILITIES IS THE RESPONSIBILITY OF THE APPLICANT/CONTRACTOR UNTIL ALL CONSTRUCTION IS APPROVED.
3. THE BOUNDARIES OF THE CLEARING LIMITS SHOWN ON THIS PLAN SHALL BE CLEARLY FLAGGED IN THE FIELD PRIOR TO CONSTRUCTION. DURING THE CONSTRUCTION PERIOD, NO DISTURBANCE BEYOND THE FLAGGED CLEARING LIMITS SHALL BE PERMITTED. THE FLAGGING SHALL BE MAINTAINED BY THE ESC SUPERVISOR FOR THE DURATION OF CONSTRUCTION.
4. THE TESC BMPS SHOWN MUST BE CONSTRUCTED PRIOR TO ALL CLEARING AND GRADING ACTIVITIES, AND IN SUCH A MANNER TO ENSURE THAT SEDIMENT-LADEN WATER DOES NOT ENTER THE DRAINAGE SYSTEM OR VIOLATE APPLICABLE WATER STANDARDS.
5. THE PERMITTEE SHALL NOTIFY THE CITY ENGINEER OR DESIGNEE TO SCHEDULE INSPECTIONS AT THE COMPLETION OF THE FOLLOWING PHASES OF WORK:
6. PRECONSTRUCTION INSPECTION. PRIOR TO THE COMMENCEMENT OF ANY OTHER WORK, THE INSPECTION OF EROSION AND SEDIMENT CONTROL DEVICES SHALL TAKE PLACE WHEN INSTALLATION OF ALL THE EROSION AND SEDIMENT CONTROL DEVICES HAS BEEN COMPLETED ACCORDING TO APPROVED PLANS. ONLY THE MINIMUM AREA NECESSARY FOR INSTALLATION OF EROSION AND SEDIMENT CONTROL DEVICES SHALL BE CLEARED AND/OR GRADED PRIOR TO THIS INSPECTION.
7. ROUGH GRADING INSPECTION. WHEN ALL ROUGH GRADING IS COMPLETE, INSPECTION OF THE SITE SHALL TAKE PLACE TO DETERMINE THE SATISFACTORY FUNCTIONING OF ALL EROSION AND SEDIMENT CONTROL DEVICES.
8. FINAL INSPECTION. UPON COMPLETION OF ALL CONSTRUCTION, INSPECTION OF THE SITE SHALL TAKE PLACE TO DETERMINE THAT ALL TEMPORARY EROSION AND SEDIMENT CONTROL DEVICES HAVE BEEN REMOVED AND THAT THE SITE HAS BEEN PERMANENTLY STABILIZED.
9. THE TESC BMPS SHOWN ON THIS PLAN ARE THE MINIMUM REQUIREMENTS FOR ANTICIPATED SITE CONDITIONS. DURING THE CONSTRUCTION PERIOD, THESE TESC FACILITIES SHALL BE UPGRADED ADDITIONAL SUMPS, RELOCATION OF DITCHES AND SILT FENCES, ETC.) AS NEEDED FOR UNEXPECTED STORM EVENTS AND AS THE CITY REQUIRES.
10. FROM OCTOBER 1 THROUGH APRIL 30, NO SOILS SHALL REMAIN EXPOSED AND UNWORKED FOR MORE THAN 2 DAYS. FROM MAY 1 THROUGH SEPTEMBER 30, NO SOILS SHALL REMAIN EXPOSED AND UNWORKED FOR MORE THAN 7 DAYS. THIS CONDITION APPLIES TO ALL SOILS ON SITE, WHETHER AT FINAL GRADE OR NOT. SEE THE DEPARTMENT OF ECOLOGY 2005 STORMWATER MANAGEMENT MANUAL FOR WESTERN WASHINGTON, VOLUME II, FOR ADDITIONAL SOIL STABILIZATION REQUIREMENTS.
11. ANY AREA NEEDING TESC MEASURES, NOT REQUIRING IMMEDIATE ATTENTION, SHALL BE ADDRESSED WITHIN 15 DAYS.
12. AT NO TIME SHALL MORE THAN 1 FOOT OF SEDIMENT BE ALLOWED TO ACCUMULATE WITHIN A CATCH BASIN. ALL CATCH BASINS AND CONVEYANCE LINES SHALL BE CLEANED PRIOR TO PAVING. THE CLEANING OPERATION SHALL NOT FLUSH SEDIMENT-LADEN WATER INTO THE DOWNSTREAM SYSTEM.

CONSTRUCTION SEQUENCE

1. CONDUCT PRE-CONSTRUCTION MEETING.
2. FLAG OR FENCE CLEARING LIMITS.
3. POST SIGN WITH NAME AND PHONE NUMBER OF TESC SUPERVISOR.
4. PROVIDE CATCH BASIN PROTECTION.
5. GRADE AND INSTALL CONSTRUCTION ENTRANCE.
6. INSTALL PERIMETER PROTECTION (SILT FENCE, BRUSH BARRIER, ETC.).
7. CONSTRUCT SEDIMENT PONDS AND TRAPS OR PROVIDE PORTABLE SEDIMENTATION TANKS.
8. GRADE AND STABILIZE CONSTRUCTION ROADS.
9. CONSTRUCT SURFACE WATER CONTROLS (INTERCEPTOR DIKES, PIPE SLOPE DRAINS, ETC.) SIMULTANEOUSLY WITH CLEARING AND GRADING FOR PROJECT DEVELOPMENT.
10. MAINTAIN EROSION CONTROL MEASURE IN ACCORDANCE WITH SNOHOMISH COUNTY STANDARDS AND MANUFACTURER'S RECOMMENDATIONS.
11. SUPPLEMENT EROSION CONTROL MEASURES, RELOCATE EROSION CONTROL MEASURES OR INSTALL NEW MEASURES AS NECESSARY TO ADDRESS CHANGES IN SITE CONDITIONS AND ENSURE THAT EROSION AND SEDIMENT CONTROL IS ALWAYS IN ACCORDANCE WITH THE COUNTY TESC AND NPDES REQUIREMENTS.
12. COVER ALL AREAS WITHIN THE SPECIFIED TIME FRAME WITH STRAW, WOOD FIBER MULCH, COMPOST, PLASTIC SHEETING, CRUSHED ROCK AS NECESSARY TO CONTROL TURBIDITY.
13. STABILIZE ALL AREAS THAT REACH FINAL GRADE WITHIN 7 DAYS.
14. SEED OR SOD ANY AREAS TO REMAIN UNWORKED FOR MORE THAN 30 DAYS.
15. UPON COMPLETION OF THE PROJECT, ALL DISTURBED AREAS MUST BE STABILIZED AND ESC BEST MANAGEMENT PRACTICES REMOVED IF APPROPRIATE.

Know what's **below.**
Call before you dig.

AHBL
TACOMA · SEATTLE · SPOKANE · TRI-CITIES
2215 North 30th Street, Suite 300, Tacoma, WA 98403
253.383.2422 TEL 253.383.2572 FAX www.ahbl.com WEB

Project Title:

MAPLE LAWN ELEMENTARY SCHOOL PARKING EXPANSION

Client:

SUMNER SCHOOL DISTRICT

19701 104th STREET EAST
BONNEY LAKE, WA 98390-7948

Job No.

2160179.10

Issue Set & Date:

PERMIT SET

MAY 27 2016

DOREEN S. GAVIN
STATE OF WASHINGTON
23467
REGISTERED
PROFESSIONAL ENGINEER
05/27/2016

NOTICE
ALTERATION OF THIS DOCUMENT SHALL INVALIDATE THE PROFESSIONAL SEAL AND SIGNATURE. PUBLICATION OF THIS DOCUMENT DOES NOT DEROGATE FROM RESERVED RIGHTS OF THE ARCHITECT. THIS DOCUMENT IS FOR USE ONLY FOR THE PROJECT IDENTIFIED IN THE TITLE BLOCK AND IS NOT TO BE USED FOR REPAIR, REMODEL OR ADDITION TO THAT PROJECT OR FOR ANY OTHER PROJECT.

4
3
2
1
Revisions:

Sheet Title:

TESC NOTES AND DETAILS

Designed by:	Drawn by:	Checked by:
N. RHEAUME	M. STEWART	D. GAVIN

Sheet No.

C2.01

3 of 8 Sheets

MAPLE LAWN ELEMENTARY SCHOOL PARKING EXPANSION

A PORTION OF THE SE 1/4 OF THE NE 1/4 OF SEC. 25, TWN. 20 N., RGE. 04 E. W.M.
CITY OF SUMNER, PIERCE COUNTY, WASHINGTON.

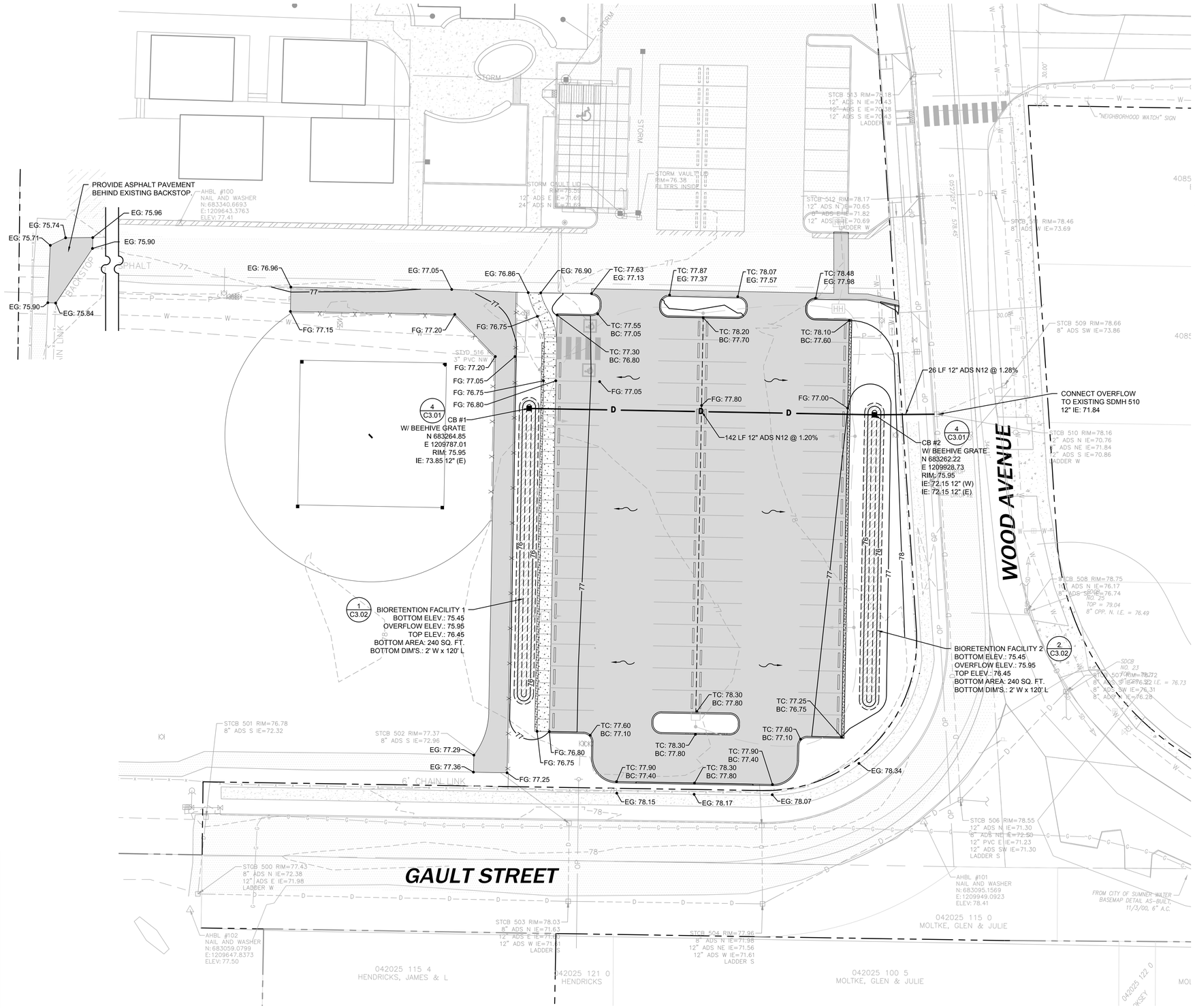

LEGEND:

STORM CATCH BASIN ■ (1 / C3.01)

STORM LINE —— D —— (2 / C3.01)

BIORETENTION AREA (1 / C3.02) (2 / C3.02)

STORM NOTES:

1. ALL STORM PIPES SHALL BE CPEP.
2. ALL STORM STRUCTURE GRATES SHALL BE LOCKING.

GRADING LEGEND:

PROPOSED CONTOUR LINE	—— 77 ——
TOP / TOE OF SLOPE	- - - - - - - - - - - -
EG	EXISTING GROUND
FG	FINISH GROUND
TC	TOP OF CURB
BC	BOTTOM OF CURB

N

GRAPHIC SCALE

0 10 20 40

1" = 20 FEET

Know what's **below.** **Call** before you dig.

AHBL

TACOMA · SEATTLE · SPOKANE · TRI-CITIES

2215 North 30th Street, Suite 300, Tacoma, WA 98403
253.383.2422 TEL 253.383.2572 FAX www.ahbl.com WEB

Project Title:

MAPLE LAWN ELEMENTARY SCHOOL PARKING EXPANSION

Client:

SUMNER SCHOOL DISTRICT

19701 104th STREET EAST
BONNEY LAKE, WA 98390-7948

Job No.

2160179.10

Issue Set & Date:

PERMIT SET

MAY 27 2016

DOREEN S. GAVIN — STATE OF WASHINGTON — 23467 — REGISTERED PROFESSIONAL ENGINEER — 05/27/2016

NOTICE
ALTERATION OF THIS DOCUMENT SHALL INVALIDATE THE PROFESSIONAL SEAL AND SIGNATURE. PUBLICATION OF THIS DOCUMENT DOES NOT DEROGATE FROM RESERVED OWNERSHIP RIGHTS IN IT. THIS DOCUMENT IS FOR USE ONLY FOR THE PROJECT IDENTIFIED IN THE TITLE BLOCK AND IS NOT TO BE USED FOR REPAIR, REMODEL OR ADDITION TO THAT PROJECT OR FOR ANY OTHER PROJECT.

4

3

2

1

Revisions:

Sheet Title:

GRADING AND STORM DRAINAGE PLAN

Designed by:	Drawn by:	Checked by:
N. RHEAUME	M. STEWART	D. GAVIN

Sheet No.

C3.00

4 of 8 Sheets

DATE: May 27, 2016 FILENAME: Q:\2016\2160179\10_CIV\CAD\2160179-SH-GRAD-STRM.dwg

MAPLE LAWN ELEMENTARY SCHOOL PARKING EXPANSION

A PORTION OF THE SE 1/4 OF THE NE 1/4 OF SEC. 25, TWN. 20 N., RGE. 04 E. W.M.
CITY OF SUMNER, PIERCE COUNTY, WASHINGTON.

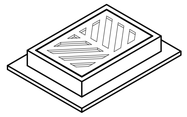

FRAME AND HERRINGBONE GRATE

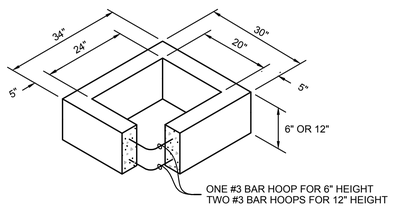

RECTANGULAR ADJUSTMENT SECTION

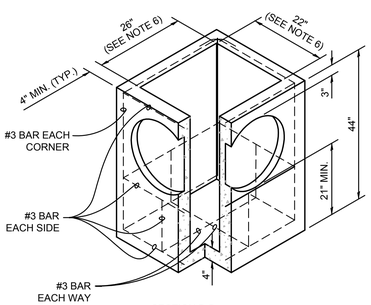

SECTION B-B

PRECAST BASE SECTION

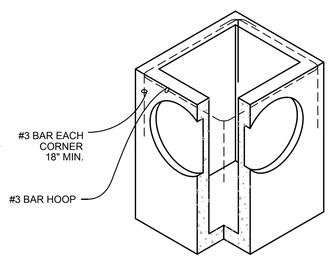

SEE NOTE 1

ALTERNATIVE PRECAST BASE SECTION

NOTE:

1. AS ACCEPTABLE ALTERNATIVES TO THE REBAR SHOWN IN THE PRECAST BASE SECTION, FIBERS (PLACED ACCORDING TO THE STANDARD SPECIFICATIONS), OR WIRE MESH HAVING A MINIMUM AREA OF 0.12 SQUARE INCHES PER FOOT SHALL BE USED WITH THE MINIMUM REQUIRED REBAR SHOWN IN THE ALTERNATIVE PRECAST BASE SECTION. WIRE MESH SHALL NOT BE PLACED IN THE KNOCKOUTS.
2. THE KNOCKOUT DIAMETER SHALL NOT BE GREATER THAN 20". KNOCKOUTS SHALL HAVE A WALL THICKNESS OF 2" MINIMUM TO 2.5" MAXIMUM. PROVIDE A 1.5" MINIMUM GAP BETWEEN THE KNOCKOUT WALL AND THE OUTSIDE OF THE PIPE. AFTER THE PIPE IS INSTALLED, FILL THE GAP WITH JOINT MORTAR IN ACCORDANCE WITH STANDARD SPECIFICATION 9-04.3.
3. THE MAXIMUM DEPTH FROM THE FINISHED GRADE TO THE LOWEST PIPE INVERT SHALL BE 5'.
4. THE FRAME AND GRATE MAY BE INSTALLED WITH THE FLANGE UP OR DOWN. THE FRAME MAY BE CAST INTO THE ADJUSTMENT SECTION.
5. THE PRECAST BASE SECTION MAY HAVE A ROUNDED FLOOR, AND THE WALLS MAY BE SLOPED AT A RATE OF 1:24 OR STEEPER.
6. THE OPENING SHALL BE MEASURED AT THE TOP OF THE PRECAST BASE SECTION.
7. ALL PICKUP HOLES SHALL BE GROUTED FULL AFTER THE BASIN HAS BEEN PLACED.

1 TYPE 1 CATCH BASIN
NOT TO SCALE

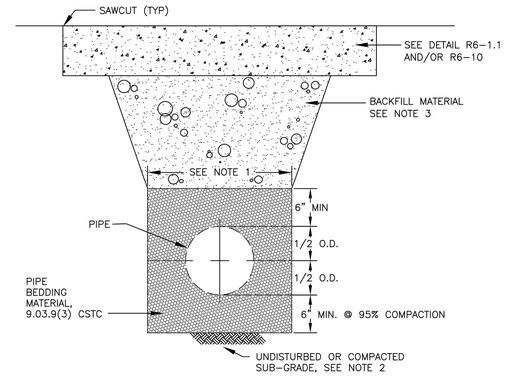

NOTES:

1. TRENCH WIDTHS – TRENCH WIDTHS MEASURED AT A LEVEL OF 6 INCHES ABOVE THE TOP OF PIPE, PIPELINES, AND APPURTENANCES SHALL NOT EXCEED THE LIMITS LISTED IN THE FOLLOWING TABLE:

NOMINAL INSIDE PIPE DIAMETER	MINIMUM TRENCH WIDTH	MAXIMUM TRENCH WIDTH
4" THROUGH 12"	OUTSIDE DIA. + 12"	OUTSIDE DIA. + 18"
14" THROUGH 60"	OUTSIDE DIA. + 18"	OUTSIDE DIA. + 24"

TRENCH LENGTHS – THE MAXIMUM ALLOWABLE LENGTH OF OPEN TRENCH EXCAVATION PERMITTED IN ANY ONE LOCATION SHALL BE ONE HUNDRED-FIFTY (150) FEET OR THE DISTANCE NECESSARY TO ACCOMMODATE THE AMOUNT OF PIPE INSTALLED IN A SINGLE DAY.

2. IN AREAS OF UNSUITABLE SUB-GRADE, OVEREXCAVATION SHALL BE REQUIRED TO THE BOUNDARIES SET BY THE ENGINEER. A GEOTEXTILE FABRIC (MIRAFI 600X OR EQUAL AS APPROVED BY THE CITY ENGINEER) SHALL BE PLACED AGAINST THE NATIVE SUBGRADE AND FOUNDATION MATERIAL PLACED AND COMPACTED TO BRING IT BACK TO GRADE. BALLAST PER WSDOT 9-03.9(1). RECYCLED PORTLAND CEMENT CONCRETE RUBBLE PER WSDOT 9-03.21(1)B, OR QUARRY SPALLS PER WSDOT 9-13.6 ARE ACCEPTABLE FOUNDATION MATERIALS.
3. ALL NATIVE SOIL IN CITY RIGHT-OF-WAY SHALL BE REMOVED AND CSTC PER 9.03.9(3) OR SELECT MATERIAL AS APPROVED BY THE CITY ENGINEER, REPLACED IN TRENCH AND MECHANICALLY COMPACTED IN 12" LIFTS TO 95% COMPACTION.

SUMNER	The City of Sumner Public Works Department
	BEDDING AND BACKFILL FOR PIPE
DATE: 7/24/07 N.T.S.	STANDARD DETAIL
LAST REVISION: 7/1/10	M5.0C
SHEET 1 of 1	FILE NO. M4

2 BEDDING AND BACKFILL FOR PIPE
NOT TO SCALE

P:\Standard Details\Misc\M4.DWG

STORMWATER NOTES

1. ALL WORKMANSHIP AND MATERIALS SHALL BE IN CONFORMANCE WITH THE CITY OF SUMNER DEVELOPMENT SPECIFICATIONS AND STANDARD DETAILS, THE MOST CURRENT COPY OF THE WSDOT STANDARD SPECIFICATIONS FOR ROAD, BRIDGE, AND MUNICIPAL CONSTRUCTION, THE ECOLOGY MANUAL, AND THE 2009 KING COUNTY SURFACE WATER DESIGN MANUAL.
2. ALL MANHOLES AND CATCH BASINS SHALL BE COVERED WITH TEMPORARY COVERS TO PREVENT DIRT AND DEBRIS FROM BEING PUSHED INTO THEM DURING CONSTRUCTION.
3. PROVISIONS SHALL BE MADE TO AVOID THE TRACKING OF SEDIMENT BY CONSTRUCTION VEHICLES ONTO PAVED PUBLIC ROADS. IF SEDIMENT IS DEPOSITED, IT IS TO BE CLEANED EVERY DAY BY SWEEPING.
4. CITY INSPECTION SHALL BE REQUIRED AT THE FOLLOWING STAGES OF CONSTRUCTION:
   - COMPLETION OF FLOW ATTENUATION OR WATER QUALITY STRUCTURES.
   - UPON COMPLETION OF EXCAVATION OF THE DETENTION FACILITIES SUBFOUNDATION AND INSTALLATION OF
   - STRUCTURAL SUPPORTS OR REINFORCEMENT, AS REQUIRED BY THE APPROVED PLANS.
   - DURING PLACEMENT OF STRUCTURAL FILL OR CONCRETE.
   - DURING PIPING AND CATCH BASIN INSTALLATION.
   - DURING BACKFILL OF FOUNDATIONS OR TRENCHES.
   - DURING CONSTRUCTION OF EMBANKMENTS.
   - UPON COMPLETION OF FINAL GRADING AND PERMANENT STABILIZATION.
5. ALL APPROVALS AND PERMITS REQUIRED BY THE CITY OF SUMNER SHALL BE OBTAINED BY THE CONTRACTOR PRIOR TO THE START OF CONSTRUCTION.
6. STORMWATER PIPE BEDDING AND BACKFILL MATERIALS AND PRACTICES SHALL BE IN ACCORDANCE WITH THE CITY OF SUMNER DEVELOPMENT SPECIFICATIONS AND STANDARD DETAILS.
7. ALL STORMWATER IMPROVEMENTS SHALL BE CONSTRUCTED IN ACCORDANCE WITH THESE APPROVED PLANS. ANY DEVIATION FROM THESE PLANS SHALL REQUIRE APPROVAL FROM THE OWNER, ENGINEER OF RECORD, AND THE CITY.
8. NATIVE MATERIAL SHALL NOT BE ALLOWED FOR BACKFILL UNLESS IT CONFORMS TO THE CITY OF SUMNER BACKFILL REQUIREMENTS. THE CONTRACTOR SHALL BE RESPONSIBLE FOR LABORATORY ANALYSIS AND ASSOCIATED COSTS REQUIRED TO VERIFY CONFORMANCE.
9. THE CONTRACTOR SHALL ADJUST ALL CATCH BASIN RIMS FLUSH WITH FINAL GRADE.
10. THE CONTRACTOR SHALL PROVIDE A MINIMUM 3-FOOT-HORIZONTAL AND 0.5-FOOT-VERTICAL SEPARATION BETWEEN STORM LINES AND ALL OTHER UTILITIES.
11. ALL PIPE AND APPURTENANCES SHALL BE LAID ON A PROPERLY PREPARED FOUNDATION IN ACCORDANCE WITH WSDOT SECTION 7-08. THIS SHALL INCLUDE LEVELING AND COMPACTING THE TRENCH BOTTOM, THE TOP OF THE FOUNDATION MATERIAL, AND ANY REQUIRED PIPE BEDDING TO A UNIFORM GRADE SO THAT THE ENTIRE PIPE IS SUPPORTED BY A UNIFORMLY DENSE, UNYIELDING BASE.
12. ALL DRAINAGE STRUCTURES, SUCH AS CATCH BASINS AND MANHOLES, NOT LOCATED WITHIN A TRAVELED ROADWAY OR SIDEWALK SHALL HAVE SOLID LOCKING LIDS.
13. ALL DRIVEWAY CULVERTS LOCATED WITHIN CITY OF SUMNER RIGHT-OF-WAY SHALL BE OF SUFFICIENT LENGTH TO PROVIDE A MINIMUM 3:1 SLOPE FROM THE EDGE OF THE DRIVEWAY TO THE BOTTOM OF THE DITCH. CULVERTS SHALL HAVE BEVELED END SECTIONS TO MATCH THE SIDE SLOPE, AND SHALL BE INSTALLED WITH A TRASH RACK ON THE UPSTREAM END.
14. ROCK FOR EROSION PROTECTION OF ROADWAY DITCHES, WHERE REQUIRED, MUST BE OF SOUND QUARRY ROCK, PLACED TO A DEPTH OF 1 FOOT.
15. STORM STUB-OUTS SHALL BE PROVIDED FOR EACH INDIVIDUAL LOT. STUB-OUTS ON EACH LOT SHALL BE LOCATED WITH A 5-FOOT-HIGH, 2-INCH BY 4-INCH STAKE, MARKED "STORM" OR "DRAIN." THE STUB-OUT SHALL EXTEND ABOVE SURFACE LEVEL, BE VISIBLE, AND BE SECURED TO THE STAKE.

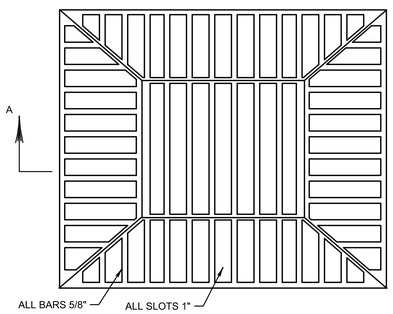

PLAN

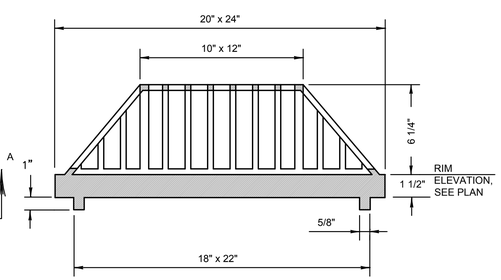

NOTES:

1) USE WITH WSDOT STANDARD PLAN B-5.20 FRAME.
2) MATERIAL TO CONFORM TO WSDOT STANDARD SPECIFICATIONS 9-05.15(2).

SECTION A-A

4 BEEHIVE GRATE
NOT TO SCALE

Know what's **below.** **Call** before you dig.

AHBL
TACOMA · SEATTLE · SPOKANE · TRI-CITIES
2215 North 30th Street, Suite 300, Tacoma, WA 98403
253.383.2422 TEL 253.383.2572 FAX www.ahbl.com WEB

Project Title:

MAPLE LAWN ELEMENTARY SCHOOL PARKING EXPANSION

Client:

SUMNER SCHOOL DISTRICT

19701 104th STREET EAST
BONNEY LAKE, WA 98390-7948

Job No.

2160179.10

Issue Set & Date:

PERMIT SET

MAY 27 2016

DOREEN S. GAVIN, STATE OF WASHINGTON, 23467, REGISTERED PROFESSIONAL ENGINEER
05/27/2016

NOTICE
ALTERATION OF THIS DOCUMENT SHALL INVALIDATE THE PROFESSIONAL SEAL AND SIGNATURE. PUBLICATION OF THIS DOCUMENT DOES NOT DEROGATE FROM RESERVED RIGHTS. THIS DOCUMENT IS INTENDED FOR USE ONLY FOR THE PROJECT IDENTIFIED IN THE TITLE BLOCK AND IS NOT TO BE USED FOR REPAIR, REMODEL OR ADDITION TO THAT PROJECT OR FOR ANY OTHER PROJECT.

4
3
2
1
Revisions:

Sheet Title:

STORM DRAINAGE NOTES AND DETAILS

Designed by:	Drawn by:	Checked by:
N. RHEAUME	M. STEWART	D. GAVIN

Sheet No.

C3.01

5 of 8 Sheets

MAPLE LAWN ELEMENTARY SCHOOL PARKING EXPANSION

A PORTION OF THE SE 1/4 OF THE NE 1/4 OF SEC. 25, TWN. 20 N., RGE. 04 E. W.M.
CITY OF SUMNER, PIERCE COUNTY, WASHINGTON.

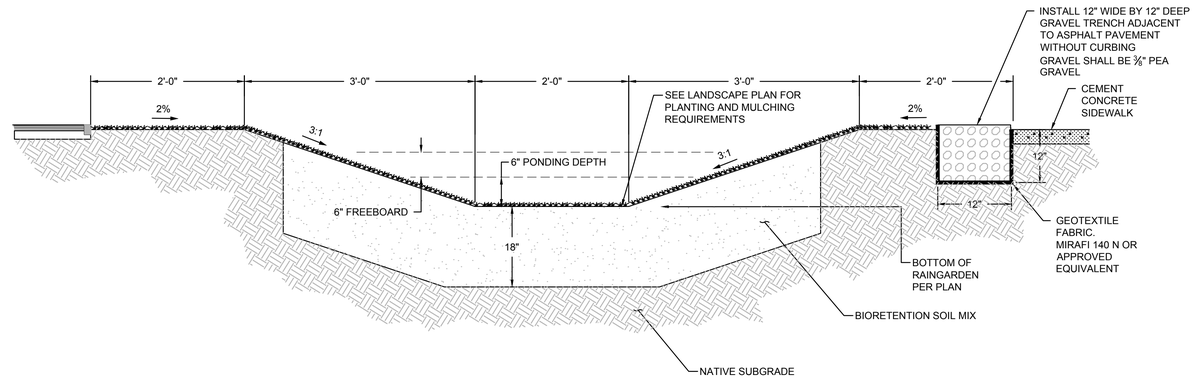

1 **BIORETENTION FACILITY 1**
NOT TO SCALE

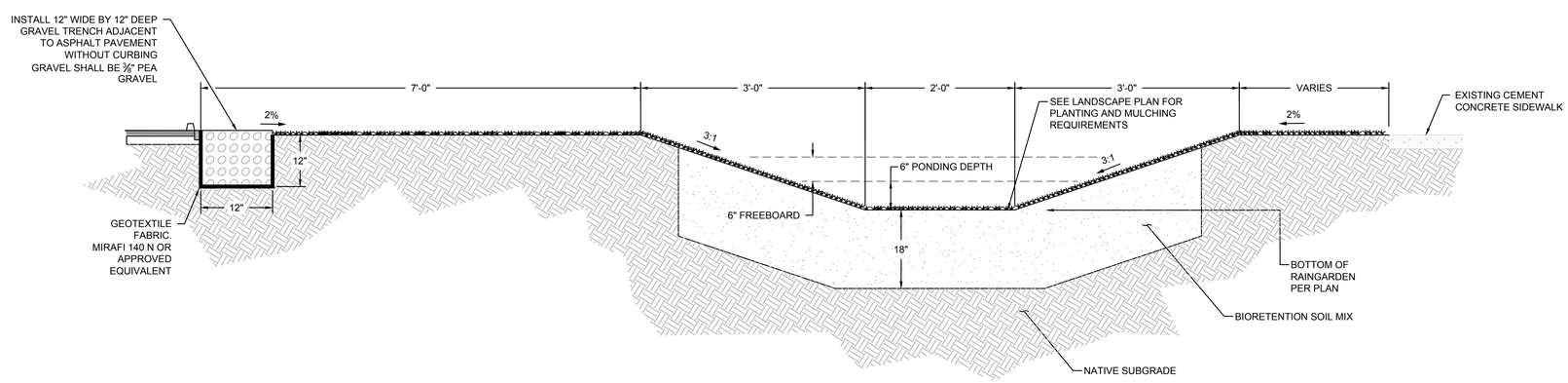

2 **BIORETENTION FACILITY 2**
NOT TO SCALE

Know what's **below.**
Call before you dig.

DATE: May 27, 2016 FILENAME: Q:\2016\2160179\10_CIV\CAD\2160179-SH-HORZ-DETL.dwg

AHBL
TACOMA · SEATTLE · SPOKANE · TRI-CITIES
2215 North 30th Street, Suite 300, Tacoma, WA 98403
253.383.2422 TEL 253.383.2572 FAX www.ahbl.com WEB

Project Title:

MAPLE LAWN ELEMENTARY SCHOOL PARKING EXPANSION

Client:

SUMNER SCHOOL DISTRICT

19701 104th STREET EAST
BONNEY LAKE, WA 98390-7948

Job No.

2160179.10

Issue Set & Date:

PERMIT SET

MAY 27 2016

DOREEN S. GAVIN
STATE OF WASHINGTON
23467
REGISTERED
PROFESSIONAL ENGINEER
05/27/2016

NOTICE
ALTERATION OF THIS DOCUMENT SHALL INVALIDATE THE PROFESSIONAL SEAL AND SIGNATURE. PUBLICATION OF THIS DOCUMENT DOES NOT DEDICATE/WAIVE RESERVED RIGHTS. THIS DOCUMENT IS INTENDED TO BE USED ONLY FOR THE PROJECT IDENTIFIED IN THE TITLE BLOCK AND IS NOT TO BE USED FOR REPAIR, REMODEL OR ADDITION TO THAT PROJECT OR FOR ANY OTHER PROJECT.

4
3
2
1
Revisions:

Sheet Title:

RAINGARDEN SECTIONS

Designed by:	Drawn by:	Checked by:
N. RHEAUME	M. STEWART	D. GAVIN

Sheet No.

C3.02

6 of 8 Sheets

MAPLE LAWN ELEMENTARY SCHOOL PARKING EXPANSION

A PORTION OF THE SE 1/4 OF THE NE 1/4 OF SEC. 25, TWN. 20 N., RGE. 04 E. W.M.
CITY OF SUMNER, PIERCE COUNTY, WASHINGTON.

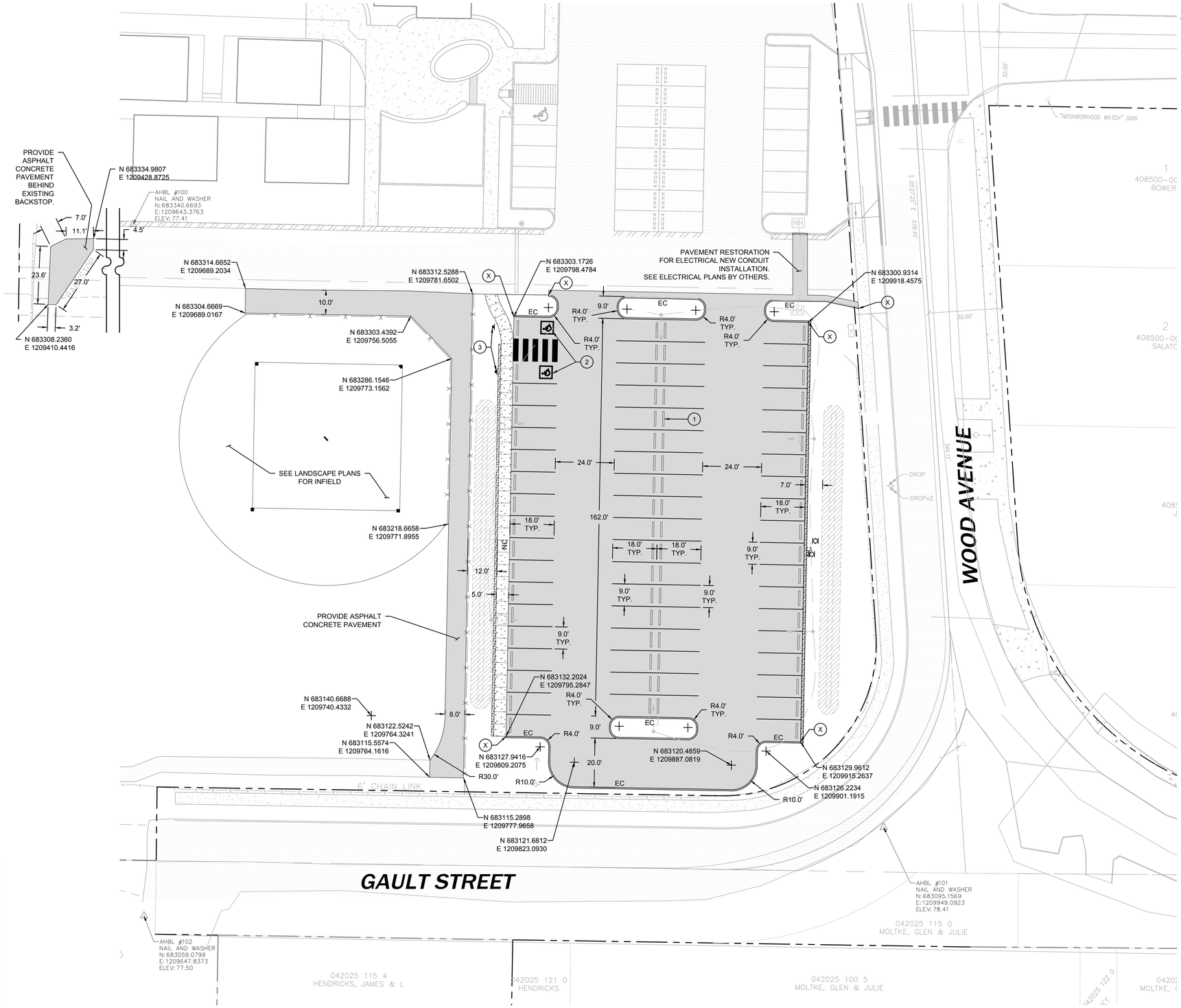

LEGEND:

ASPHALT CONCRETE PAVING	4 / C4.01
CEMENT CONCRETE PAVING	1 / C4.01
WHEELSTOP	3 / C4.01
ADA PARKING	6 / C4.01
EC — EXTRUDED CURB	
NC — NO CURB	

PAVING NOTES:

1. PARKING STALL STRIPES SHALL BE 4" WIDE AND WHITE.
2. HOT TAR SEAL AT JOINT WITH EXISTING ASPHALT EDGE AT SAWCUT LINE.

KEYNOTES

1	WHEELSTOP	3 / C4.01
2	VAN ACCESSIBLE STALL	5 / C4.01
3	ADA PARKING SIGN	6 / C4.01
X	CHANGE IN CURB TYPE	

N

GRAPHIC SCALE
0 10 20 40
1" = 20 FEET

Know what's **below.** **Call** before you dig.

AHBL
TACOMA · SEATTLE · SPOKANE · TRI-CITIES
2215 North 30th Street, Suite 300, Tacoma, WA 98403
253.383.2422 TEL 253.383.2572 FAX www.ahbl.com WEB

Project Title:

MAPLE LAWN ELEMENTARY SCHOOL PARKING EXPANSION

Client:

SUMNER SCHOOL DISTRICT

19701 104th STREET EAST
BONNEY LAKE, WA 98390-7948

Job No.

2160179.10

Issue Set & Date:

PERMIT SET

MAY 27 2016

DOREEN S. GAVIN
STATE OF WASHINGTON
23467
REGISTERED PROFESSIONAL ENGINEER
05/27/2016

NOTICE
ALTERATION OF THIS DOCUMENT SHALL INVALIDATE THE PROFESSIONAL SEAL AND SIGNATURE. PUBLICATION OF THIS DOCUMENT DOES NOT DEROGATE FROM RESERVED OWNERSHIP RIGHTS IN IT. THIS DOCUMENT IS FOR USE ONLY FOR THE PROJECT IDENTIFIED IN THE TITLE BLOCK AND IS NOT TO BE USED FOR REPAIR, REMODEL OR ADDITION TO THAT PROJECT OR FOR ANY OTHER PROJECT.

4
3
2
1
Revisions:

Sheet Title:

HORIZONTAL CONTROL AND PAVING PLAN

Designed by:	Drawn by:	Checked by:
N. RHEAUME	M. STEWART	D. GAVIN

Sheet No.

C4.00

7 of 8 Sheets

DATE: May 27, 2016 FILENAME: Q:\2016\2160179\10_CIV\CAD\2160179-SH-HORZ-DETL.dwg

MAPLE LAWN ELEMENTARY SCHOOL PARKING EXPANSION

A PORTION OF THE SE 1/4 OF THE NE 1/4 OF SEC. 25, TWN. 20 N., RGE. 04 E. W.M.
CITY OF SUMNER, PIERCE COUNTY, WASHINGTON.

MINIMUM SIDEWALK WIDTHS
SEE SUMNER DEVELOPMENT SPECIFICATIONS, CHAPTER 6.

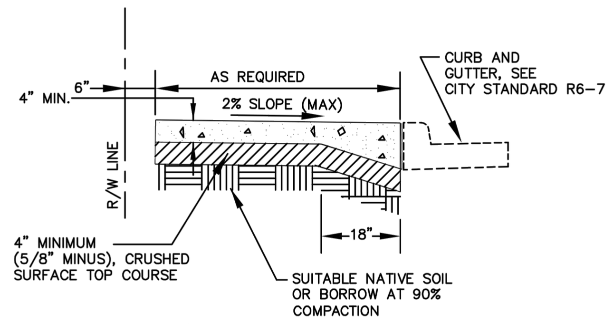

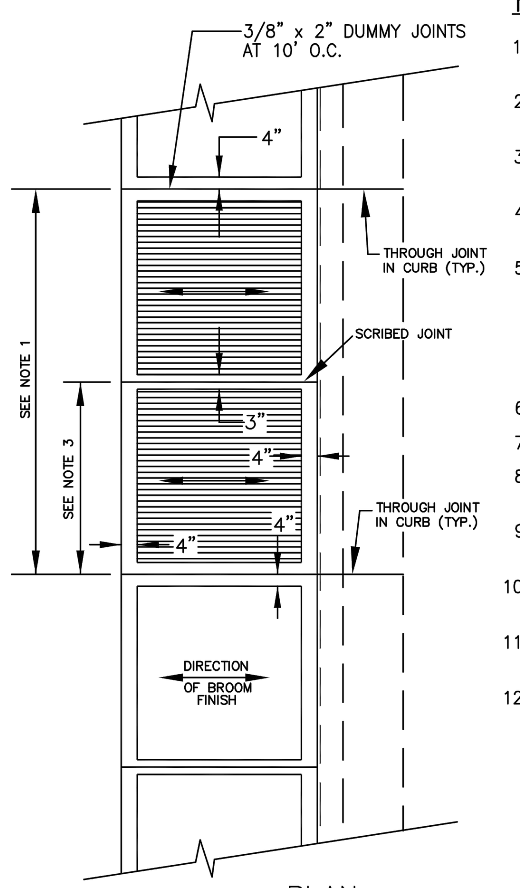

NOTES:

1. DUMMY JOINTS SHALL BE 3/8" x 2" ASPHALT SATURATED FELT PLACED AT 10' O.C.
2. THRU JOINTS SHALL BE 3/8" ASPHALT SATURATED FELT PLACED AT DRIVEWAY AND ALLEY RETURNS.
3. SCRIBE MARKS SHALL BE 1/2" DEEP AND 1/4" WIDE PLACED AT 5' O.C. FOR 5' SIDEWALKS.
4. ALL JOINTS SHALL BE CLEAN AND EDGED TO A 1/4" RADIUS. JOINTS SHALL BE FLUSH WITH THE FINISHED SURFACE.
5. ALL UTILITY POLES AND STREET SIGN POSTS IN SIDEWALK AREA NOT REQUIRED TO BE RELOCATED BY THE CITY ENGINEER SHALL HAVE A SQUARE SECTION OF CONCRETE SURROUNDED BY 3/8" THRU JOINT MATERIAL (FULL DEPTH) AROUND THE POLE. THE JOINT SHALL BE NO CLOSER THAN 12" TO ANY SIDE OF THE POLE.
6. FORMS SHALL BE INSPECTED PRIOR TO PLACING CONCRETE.
7. CONCRETE SHALL MEET WSDOT SPEC. 6-02.3(2)b.
8. WHERE A SIDEWALK IS TO BE PLACED AGAINST THE CURB AND GUTTER, THE JOINT SHALL BE A COLD JOINT.
9. A 3/8" THRU JOINT IS TO BE PLACED WHENEVER CONCRETE IS POURED AGAINST EXISTING CONCRETE.
10. CONSTRUCTION SHALL BE PER WSDOT 8-14. METHOD OF CURING SHALL BE APPROVED BY CITY ENGINEER.
11. NO CALCIUM IS ALLOWED IN CEMENT CONCRETE MIX FOR STRUCTURES CONSTRUCTED IN RIGHT-OF-WAY.
12. CURB RAMPS SHALL BE CONSTRUCTED TO CURRENT WSDOT STANDARD PLANS, SECTION F.

SUMNER (INCORPORATED 1891)	The City of Sumner Public Works Department	
	SIDEWALK WITHOUT PLANTING STRIP	
	DATE: 7/24/07 N.T.S.	STANDARD DETAIL
	LAST REVISION: 6/25/10	STREET
	SHEET 1 of 1	FILE NO. R6-5

R:\Standard Details\STREET\R6-5.DWG

1 CEMENT CONCRETE SIDEWALLK
NOT TO SCALE

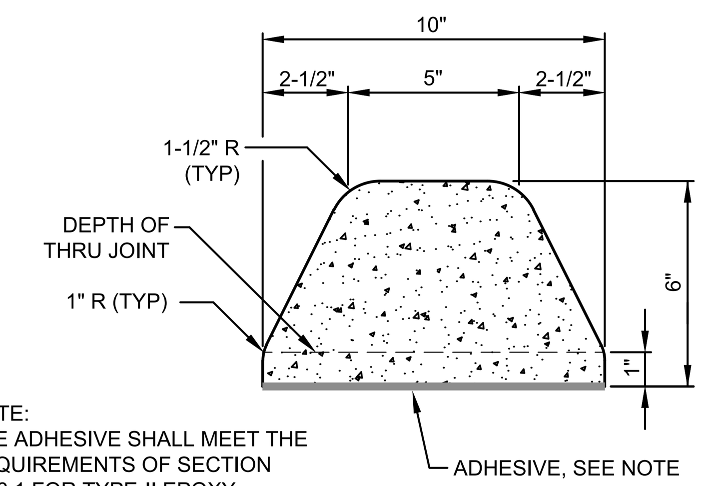

NOTE:
THE ADHESIVE SHALL MEET THE REQUIREMENTS OF SECTION 9-26.1 FOR TYPE-II EPOXY BONDING AGENT

2 EXTRUDED CURB
NOT TO SCALE

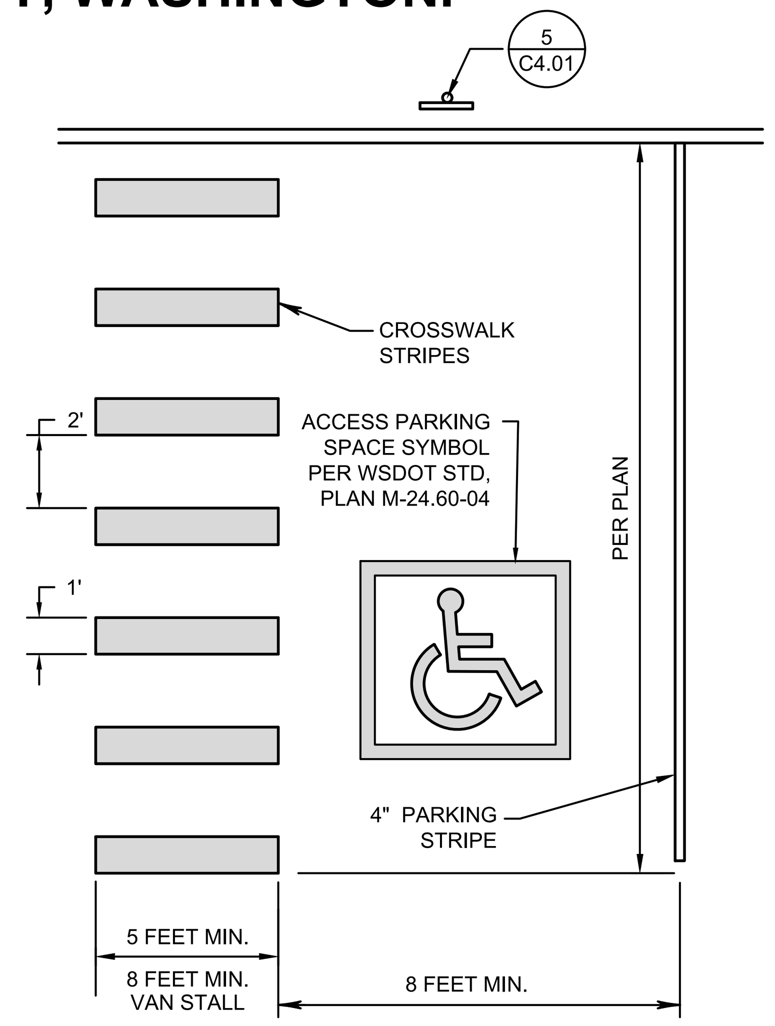

6 ACCESSIBLE PARKING STRIPING
NOT TO SCALE

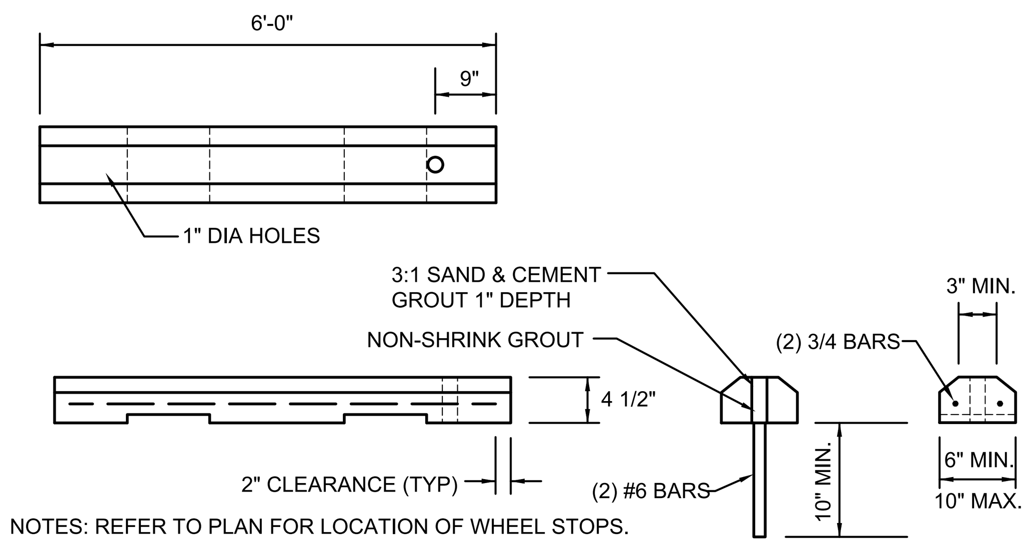

NOTES: REFER TO PLAN FOR LOCATION OF WHEEL STOPS.

3 SLOTTED WHEELSTOP
NOT TO SCALE

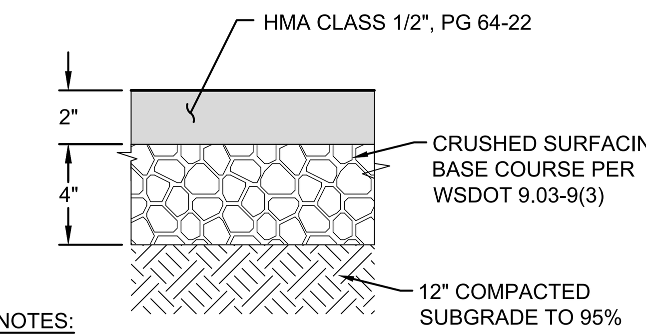

NOTES:

1. ALL DEPTHS SHOWN ARE COMPACTED DEPTHS.
2. THE CONTRACTOR SHALL EXPOSE EXISTING SUBGRADE, PROOF ROLL AND COMPACT TO 95%. IF YIELDING CONDITIONS ARE ENCOUNTERED, YIELDING MATERIALS SHALL BE REPLACED WITH IMPORTED STRUCTURAL FILL MATERIAL. THE DEPTH OF MATERIAL REPLACEMENT SHALL BE DETERMINED BY THE GEOTECHNICAL ENGINEER.

4 ASPHALT CONCRETE PAVING
NOT TO SCALE

GENERAL NOTES:

1. ALL MATERIAL AND WORKMANSHIP SHALL CONFORM TO THE MOST RECENT WSDOT STANDARD SPECIFICATIONS FOR ROAD, BRIDGE, AND MUNICIPAL CONSTRUCTION AND THE CITY OF SUMNER DEVELOPMENT SPECIFICATIONS. IN CASE OF CONFLICT, THE CITY DEVELOPMENT SPECIFICATIONS AND STANDARD DETAILS TAKE PRECEDENCE.
2. PRIOR TO ANY WORK COMMENCING, THE CONTRACTOR SHALL ATTEND A PRECONSTRUCTION MEETING TO BE ATTENDED BY ALL MAJOR CONTRACTORS, REPRESENTATIVES OF INVOLVED UTILITIES, AND THE CITY OF SUMNER. CALL (253) 299-5700 TO SCHEDULE A MEETING AT LEAST TWO (2) WORKING DAYS IN ADVANCE.
3. SITE OWNER IS TO OBTAIN ALL PERMITS REQUIRED FROM THE STATE TO INCLUDE BUT NOT TO BE LIMITED TO THE NPDES STORMWATER GENERAL PERMIT.
4. THE CONTRACTOR SHALL NOTIFY THE COUNTY AND/OR STATE, AND OBTAIN ALL NECESSARY PERMITS AND APPROVALS IF CONSTRUCTION IS TO TAKE PLACE IN COUNTY AND/OR STATE RIGHT-OF-WAY.
5. ALL WORK WITHIN THE CITY RIGHT-OF-WAY SHALL BE CONDUCTED BY A LICENSED, BONDED, AND INSURED CONTRACTOR. THE CONTRACTOR SHALL BE REQUIRED TO SUBMIT A STREET OBSTRUCTION NOTIFICATION FORM, INCLUDING A TRAFFIC CONTROL PLAN IN CONFORMANCE WITH THE MANUAL ON UNIFORM TRAFFIC CONTROL DEVICES AND WSDOT SPECIFICATION SECTION 1-10, TO THE PUBLIC WORKS DEPARTMENT FOR REVIEW AND APPROVAL A MINIMUM OF TWO (2) FULL WORKING DAYS PRIOR TO STREET OBSTRUCTION. NOTE THAT THE DAY THE STREET OBSTRUCTION NOTIFICATION FORM IS SUBMITTED TO THE CITY SHALL NOT COUNT AS ONE OF THE TWO DAYS. A NEW FORM WILL BE REQUIRED IF THE TIME, DATE, OR LOCATION OF THE PROPOSED OBSTRUCTION CHANGES FROM THAT REPORTED ON THE ORIGINAL FORM. CERTIFIED COPIES OF THE CONTRACTOR'S BUSINESS LICENSE AND INSURANCE POLICY SHALL BE SUBMITTED TO THE PUBLIC WORKS DEPARTMENT BEFORE PERMIT ISSUANCE.
6. ANY STRUCTURE AND/OR OBSTRUCTION THAT NEED TO BE REMOVED OR RELOCATED AS A RESULT OF THIS PROJECT SHALL BE DONE SO AT THE DEVELOPER'S EXPENSE.
7. ANY DISTURBANCE OR DAMAGE TO CRITICAL AREAS AND ASSOCIATED BUFFERS SHALL BE MITIGATED IN ACCORDANCE WITH A MITIGATION PLAN APPROVED BY THE SUMNER COMMUNITY DEVELOPMENT DEPARTMENT. THE PREPARATION AND IMPLEMENTATION OF THE MITIGATION PLAN SHALL BE AT THE DEVELOPER'S EXPENSE.
8. ALL MANHOLES AND CATCH BASINS SHALL BE COVERED WITH TEMPORARY COVERS TO PREVENT ENTRANCE OF DIRT AND DEBRIS DURING CONSTRUCTION.
9. BURIED UTILITIES ARE SHOWN IN THE APPROXIMATE LOCATION. THE CONTRACTOR SHALL LOCATE ALL UTILITIES PRIOR TO ANY CONSTRUCTION. CALL 1-800-424-5555 FOR "ONE CALL LOCATES."
10. ANY REVISIONS MADE TO THESE PLANS MUST BE REVIEWED AND APPROVED BY THE ENGINEER OF RECORD AND THE CITY PUBLIC WORKS DEPARTMENT PRIOR TO IMPLEMENTATION IN THE FIELD.
11. TRAFFIC CONTROL SHALL BE MAINTAINED BY THE CONTRACTOR. CONSTRUCTION SIGNS, CONES, BARRICADES, AND FLAGGERS SHALL BE EMPLOYED AS SPECIFIED ON THE APPROVED TRAFFIC CONTROL PLANS OR AS REQUIRED BY THE PUBLIC WORKS DEPARTMENT.
12. AN APPROVED COPY OF THESE PLANS WITH REVISIONS MUST BE ON SITE WHENEVER CONSTRUCTION WORK IS IN PROGRESS.
13. THE PUBLIC WORKS DEPARTMENT REQUIRES THE CONTRACTOR TO PROVIDE ADEQUATE HORIZONTAL AND VERTICAL CONTROL AT ALL TIMES ON SITE FOR PERIODIC SPOT CHECKS BY CITY PERSONNEL. THIS CONTROL WILL CONSIST OF FRONT-PROPERTY CORNER OFFSETS (20 FEET) STAKED PERPENDICULAR TO THE ROAD CENTERLINE. ALL CURVE RADIUS POINTS WILL BE STAKED.
14. PRIVATE UTILITY EASEMENTS ARE REQUIRED ON THE FRONT 10 FEET OF EACH LOT.
15. IF WORKERS ENTER ANY TRENCH OR OTHER EXCAVATION, FOUR (4) FEET OR MORE IN DEPTH, THAT DOES NOT MEET THE OPEN PIT REQUIREMENTS OF WSDOT SECTION 2-09.3, THE TRENCH/EXCAVATION SHALL BE SHORED AND CRIBBED. THE CONTRACTOR ALONE SHALL BE RESPONSIBLE FOR WORKER SAFETY. ALL TRENCH SAFETY SYSTEMS SHALL MEET THE REQUIREMENTS OF THE WASHINGTON INDUSTRIAL SAFETY AND HEALTH ACT, CHAPTER 49 17
16. EAST PIERCE FIRE AND RESCUE SHALL BE NOTIFIED IMMEDIATELY OF ALL GAS LINE BREAKS.
17. CONSTRUCTION HOURS ARE MONDAY THROUGH FRIDAY, 7:00 A.M. TO 6:00 P.M., AND SATURDAY, SUNDAY, AND HOLIDAYS, 10:00 A.M. TO 6:00 P.M.. WORK CONDUCTED OUTSIDE THESE HOURS SHALL BE APPROVED BY THE COMMUNITY DEVELOPMENT DEPARTMENT A MINIMUM OF TWO (2) WORKING DAYS IN ADVANCE. THE DAY OF SUBMITTAL SHALL NOT BE COUNTED AS ONE OF THE TWO REQUIRED DAYS. ALL CITY PERSONNEL OVERTIME INSPECTION FEES SHALL BE PAID BY THE CONTRACTOR.
18. BEFORE COMPLETION OF THE PROJECT, THE CONTRACTOR SHALL OBTAIN A "PUNCH LIST" PREPARED BY THE PUBLIC WORKS DEPARTMENT DETAILING REMAINING ITEMS OF WORK TO BE COMPLETED. ALL ITEMS OF WORK LISTED SHALL BE SATISFACTORILY COMPLETED PRIOR TO ACCEPTANCE OF THE WATER SYSTEM AND PROVISION OF SANITARY SEWER SERVICE.
19. RECORD DRAWINGS (MYLAR) WILL BE SUBMITTED TO THE CITY BEFORE FINAL ACCEPTANCE.
20. NO CONSTRUCTION WORK SHALL BEGIN UNTIL THE OWNER/DEVELOPER HAS ACQUIRED ALL REQUIRED RIGHT-OFWAY AND/OR EASEMENTS, AND HAS PROVIDED THE PUBLIC WORKS DEPARTMENT WITH COPIES OF THE RECORDED DOCUMENTS

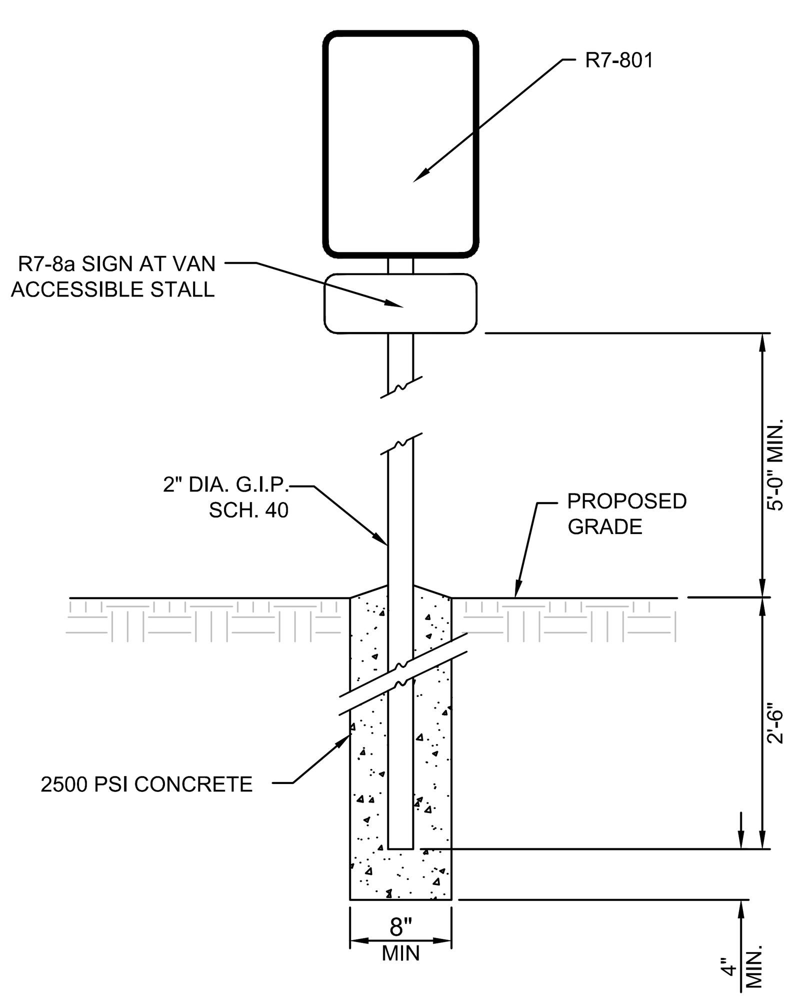

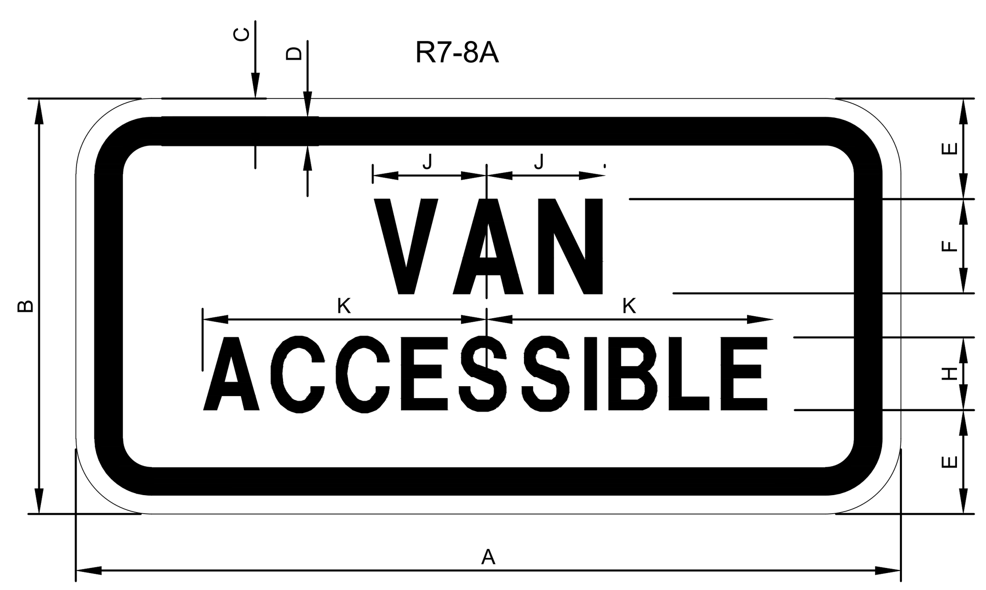

COLORS:
LEGEND - GREEN (REFL)
SYMBOL - BLUE (REFL)
BACKGROUND - WHITE (REFL)

DIMENSIONS (INCHES)										
A	B	C	D	E	F	G	H	J	K	L
12	18	3/8	5/8	2C	3/4C	1	1/2	3/4	6	1 1/2

5 ACCESSIBLE PARKING SINGAGE
NOT TO SCALE

Know what's **below.**
Call before you dig.

AHBL
TACOMA · SEATTLE · SPOKANE · TRI-CITIES
2215 North 30th Street, Suite 300, Tacoma, WA 98403
253.383.2422 TEL 253.383.2572 FAX www.ahbl.com WEB

Project Title:
MAPLE LAWN ELEMENTARY SCHOOL PARKING EXPANSION

Client:
SUMNER SCHOOL DISTRICT
19701 104th STREET EAST
BONNEY LAKE, WA 98390-7948

Job No.
2160179.10

Issue Set & Date:
PERMIT SET
MAY 27 2016

DOREEN S. GAVIN
STATE OF WASHINGTON
23467
REGISTERED PROFESSIONAL ENGINEER
05 / 27 / 2016

NOTICE
ALTERATION OF THIS DOCUMENT SHALL INVALIDATE THE PROFESSIONAL SEAL AND SIGNATURE. PUBLICATION OF THIS DOCUMENT DOES NOT DEROGATE FROM RESERVED OWNERSHIP RIGHTS IN IT. THIS DOCUMENT IS FOR USE ONLY FOR THE PROJECT IDENTIFIED IN THE TITLE BLOCK AND IS NOT TO BE USED FOR REPAIR, REMODEL OR ADDITION TO THAT PROJECT OR FOR ANY OTHER PROJECT.

4
3
2
1
Revisions:

Sheet Title:
PAVING NOTES AND DETAILS

Designed by:	Drawn by:	Checked by:
N. RHEAUME	M. STEWART	D. GAVIN

Sheet No.
C4.01