LOCATED IN THE N.E. 1/4 OF SEC 30, T20N, R5E, W.M.,
SUMNER, WASHINGTON

CONSTRUCTION SEQUENCE

1. ATTEND PRECONSTRUCTION MEETING WITH THE CITY OF SUMNER (C.O.S.).
2. ESTABLISH CLEARING AND GRADING LIMITS PER T.E.S.C. PLAN SHEET C3.
3. CONTRACTOR SHALL VERIFY THAT ALL EROSION CONTROL DEVICES, CB PROTECTION, PONDS, DITCHES AND SWALES AS SHOWN BY THE T.E.S.C. PLAN ARE INSTALLED TO DIRECT ALL SURFACE WATER TO THE STORM SYSTEM AS CONSTRUCTION PROGRESSES. NO UNCONTROLLED SURFACE WATER SHALL BE ALLOWED TO LEAVE THE SITE AT ANY TIME DURING THE GRADING OPERATIONS.
4. CITY INSPECTION AND APPROVAL OF INSTALLED TESC MEASURES REQUIRED PRIOR TO BEGINNING SITE GRUBBING OR GRADING.
5. THE CONTRACTOR SHALL BE RESPONSIBLE FOR KEEPING EQUIPMENT PROPERLY MAINTAINED TO PREVENT LEAKAGE OF ANY OILS OR OTHER EQUIPMENT FLUIDS, AND SHALL ALSO MAKE PROVISIONS TO HAVE SPILL PREVENTION KITS/EQUIPMENT AVAILABLE AS/IF NEEDED.
6. GRUBBING & GRADING WORK MAY BEGIN.
7. REMOVE/ABANDON EX. STRUCTURES/UTILITIES, SEPTIC SYSTEM AND/OR WELLS (IF ANY) PER CITY OF SUMNER, STATE & FEDERAL GUIDELINES AS REQUIRED.
8. WORK WITHIN R/W (IF ANY) SHALL BE LIMITED TO 15 CONSECUTIVE DAYS. CONTRACTOR SHALL COORDINATE WITH CITY OF SUMNER REGARDING TIMING.
9. FINISH GRADING & UTILITY INSTALLATION MAY BEGIN.
10. CONTRACTOR SHALL WATER THE SITE AS NECESSARY TO REDUCE DUST EMISSIONS AS A RESULT OF CONSTRUCTION ACTIVITY DURING DRY PERIODS.
11. OBSERVE REQUIREMENTS OF PROJECT GEOTECHNICAL REPORT DURING ALL ASPECTS OF PROJECT GRADING, FILLING, AND BUILDING SUB-GRADE PREPARATION.
12. CONSTRUCT UTILITIES & STORM CONVEYANCE FACILITIES AS NOTED.
13. COMPLY WITH THE GRADING, DRAINAGE & EROSION CONTROL NOTES IN THE CONTINUOUS OPERATION AND MAINTENANCE OF THESE FACILITIES.
14. CLEAN ENTIRE STORM SYSTEM, SWEEP STREETS AS DIRECTED BY THE C.O.S. INSPECTOR.
15. REMOVE EROSION & SEDIMENTATION CONTROL MEASURES UPON FINAL SITE STABILIZATION & APPROVAL FROM CITY INSPECTOR.

APPROXIMATE FILL/CUT TYPE

SPECIFICATIONS FOR STRUCTURAL FILL

FILL MATERIAL TO BE CLEAN, WELL GRADED COMPACTIBLE MATERIAL PER THE PROJECT SOILS REPORT (CLASS "A" RECOMENDED, CLASS "B" W/ OWNERS AUTHORIZATION) WITHOUT WASTE AS DEFINED IN WAC 173-304-100. SEE PROJECTS SOILS REPORT FOR FURTHER SPECIFICATION/INFORMATION EARTH EARTH WORK VOLUMES:

EST. CUT = 2,600 CY (INCLUDING STRIPPING & PONDS) *

EST. FILL (TO TOP OF SUBGRADE) = 13,800 CY *

* CONTRACTOR TO VERIFY

SPECIFICATIONS FOR GRUBBING

ALL AREAS TO BE GRADED SHALL BE CLEARED OF VEGETATION, BRUSH, AND ANY OBVIOUS EXISTING DEBRIS, AND STRIPPED OF ANY TOPSOIL AND UNDERLYING SOILS THAT ARE SOFT, LOOSE AND/OR CONTAIN SIGNIFICANT AMOUNTS OF ROOT AND OTHER ORGANIC MATTER. A 6" DEPTH OF STRIPPING IS EXPECTED, MORE OR LESS; HOWEVER, STRIPPING SHALL TAKE PLACE TO WHATEVER DEPTH IS NECESSARY TO REMOVE ORGANIC MATTER AND SOFT/UNSTABLE MATERIALS FROM BENEATH AREAS TO BE FILLED AND/OR PAVED. STRIPPING SHOULD EXPOSE MEDIUM DENSE, STIFF, OR MORE COMPETENT, NON-ORGANIC EXISTING SOILS. SEE PROJECT SOILS REPORT (IF ANY) FOR FURTHER SPECIFICATIONS.

LINE	BEARING	DISTANCE
L1	S 21°45'36" E	10.00'
L2	S 21°45'36" E	20.00'
L3	N 68°14'24" E	17.16'

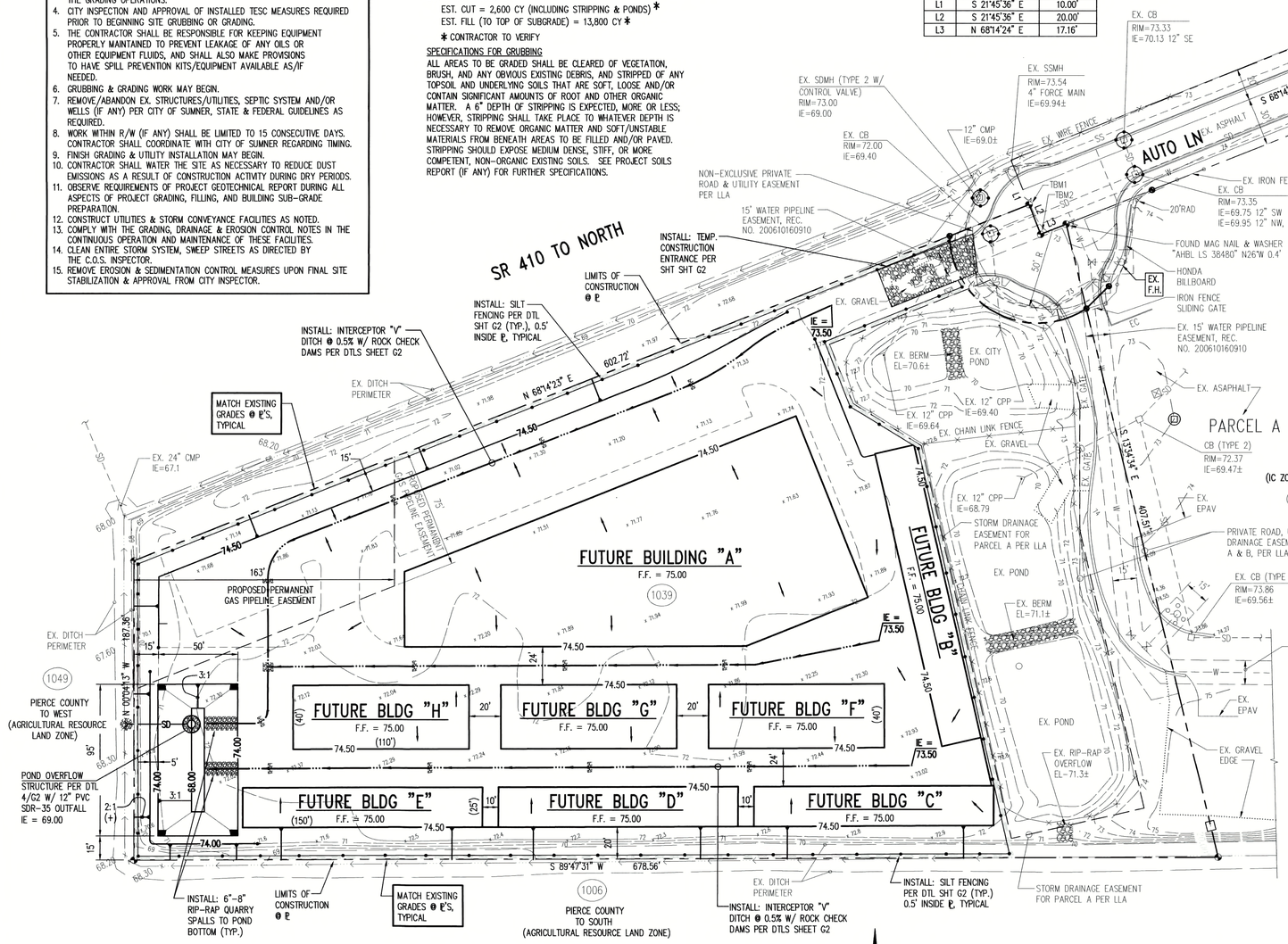

PRELIMINARY SITE PLAN

SCALE 1"=40'

0 40 80 120

GRADING NOTES

1. THE CONTRACTOR SHALL GRADE THE SITE TO THE GRADES SHOWN PER THE DRAWINGS AND SPECIFICATIONS. THE CONTRACTOR IS RESPONSIBLE FOR FOLLOWING THE REQUIREMENTS OF THESE DOCUMENTS REGARDING ALL CONSTRUCTION METHODS, AND OTHER SOIL RELATED REQUIREMENTS.
2. THE CONTRACTOR SHALL SUBMIT FILL SOURCE, SPECIFICATION, AND A HAUL ROUTE PLAN TO THE CITY OF SUMNER FOR REVIEW AND APPROVAL PRIOR TO PROCEEDING WITH ON-SITE WORK.
3. COMPLY W/ THE PROJECT GEOTECHNICAL REPORT DURING ALL GRADE & FILL WORK.

DUST CONTROL NOTES

1. CONTRACTOR SHALL MINIMIZE THE PERIOD OF SOIL EXPOSURE THROUGH USE OF TEMPORARY GROUND COVER AND OTHER TEMPORARY STABILIZATION PRACTICES SUCH AS SEEDING AND MULCHING, AND EROSION BLANKETS.
2. DURING CONSTRUCTION AND DRY WEATHER, SPRINKLE THE SITE WITH WATER UNTIL SURFACE AREA IS WET. REPEAT THE PROCESS AS NEEDED DURING THE DAY.
3. ALL TRUCK TRAFFIC MUST USE THE CONSTRUCTION ENTRANCE AS DESIGNED AND SHOWN ON THE T.E.S.C. PLANS TO PREVENT CARRYING MUD INTO STREET.
4. ALL OPEN BODIED TRUCKS TRANSPORTING FINE MATERIAL TO THE SITE MUST BE COVERED TO PREVENT DUST FROM BLOWING FROM THE TRUCKS.
5. DURING CONSTRUCTION, ALL PROPERTIES AND ALL PUBLIC STREETS ADJACENT TO PROJECT WHICH WILL BE USED BY CONSTRUCTION TRAFFIC SHALL BE KEPT CLEAN OF ALL MATERIAL DEPOSITS RESULTING FROM ON-SITE CONSTRUCTION.

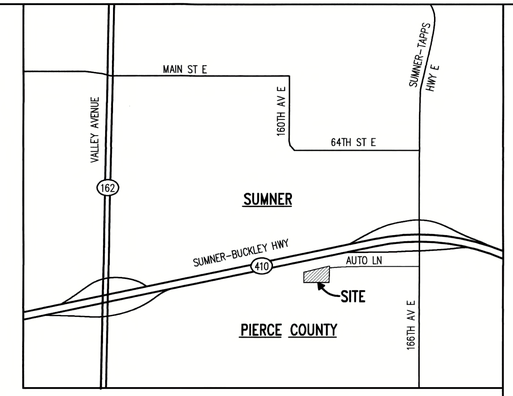

VICINITY MAP
N.T.S.

SITE DATA

SITE AREA ..... 195,020.5 S.F., 4.48 ACRES
ZONING ..... INTERCHANGE COMMERCIAL IC
SETBACKS REQUIRED:
FRONT ..... 20'
SIDE ..... 15'
REAR ..... 20'
SIDE/REAR ADJ. TO RES ..... 50'

OWNER INFORMATION

ROGER & HENRY HEBERT
2020 A STREET SE, SUITE 101
AUBURN, WA 98002
PH: (253) 931-8888
FX: (253) 931-0186

PROJECT SUVEYOR

CASCADE LAND SURVEYING
C/O MR. JEFF OTTERSON
11722 261ST AVE E
BUCKLEY, WA 98321
PH: (360) 897-1017
FX: (360) 897-1227

LEGAL DESCRIPTION

COMMENCING AT THE SOUTHEAST CORNER OF THE WEST HALF OF THE NORTHEAST QUARTER OF THE NORTHEAST QUARTER OF SECTION 30, TOWNSHIP 20 NORTH, RANGE 5 EAST OF THE W.M., PIERCE COUNTY, WASHINGTON;
THENCE SOUTH 89°47'31" WEST 563.81 FEET ALONG THE SOUTH LINE OF SAID SUBDIVISION TO THE TRUE POINT OF BEGINNING;
THENCE NORTH 13°34'34" WEST 407.51 FEET TO THE INTERSECTION OF THE WEST LINE OF SAID SUBDIVISION WITH THE SOUTH RIGHT OF WAY LINE OF PRIMARY STATE HIGHWAY NO. 5 APPROPRIATED BY THE STATE OF WASHINGTON IN PIERCE COUNTY SUPERIOR COURT CAUSE NO. 153777;
THENCE ALONG SAID SOUTH RIGHT OF WAY LINE SOUTH 68°14'24" WEST 17.16;
THENCE NORTH 21°45'36" WEST 20.00;
THENCE SOUTH 68°14'23" WEST 602.72 FEET TO THE INTERSECTION OF SAID SOUTH RIGHT OF WAY LINE WITH THE EAST LINE OF THE A. H. WOOLERY DONATION LAND CLAIM;
THENCE SOUTH 00°04'13" EAST 187.36 FEET ALONG SAID EAST LINE OF THE A. H. WOOLERY DONATION LAND CLAIM TO THE SOUTH LINE OF THE NORTHWEST QUARTER OF THE NORTHEAST QUARTER OF SAID SECTION 30;
THENCE NORTH 89°47'31" EAST 678.55 FEET ALONG THE SOUTH LINE OF THE NORTHWEST QUARTER OF THE NORTHEAST QUARTER AND THE NORTHEAST QUARTER OF THE NORTHEAST QUARTER OF SAID SECTION 30 TO THE TRUE POINT OF BEGINNING;
ALSO KNOWN AS PARCEL B OF PIERCE COUNTY LOT LINE ADJUSTMENT NUMBER PLN2003-00027 AS RECORDED UNDER RECORDING NO. 200307245001;
TOGETHER WITH AN EASEMENT FOR INGRESS AND EGRESS AS DELINEATED ON SAID LOT LINE ADJUSTMENT.

VERTICAL DATUM

NAVD 88

PARCEL NUMBER

052030-1039

BENCHMARK

WSDOT BENCHMARK NO. BM27410-7, ID NO. 2206, BEING A WSDOT BRASS DISK CEMENTED INTO A DRILL HOLE AND SET LEVEL WITH THE CONCRETE BRIDGE DECK SURFACE ON THE SOUTH SHOULDER OF SR 410, AT THE SOUTHEAST CORNER OF THE 166TH AVE. E. OVERCROSSING BRIDGE DECK, 18' WEST FROM THE EAST END OF SOUTH CONCRETE BRIDGE RAIL, ELEVATION = 93.888 USFT, NAVD 88 DATUM.

SITE BENCHMARKS

TBM 1: SET MAG NAIL & WASHER @ PROPERTY CORNER, ELEV = 72.99
TBM 2: SET MAG NAIL & WASHER @ PROPERTY CORNER, ELEV = 72.97

LEGEND

DESCRIPTION	NEW	EXISTING
STORM SEWER	SD	SD
SANITARY SEWER		SS
WATER		W
FIRE HYDRANT		
CATCH BASIN		
SS MANHOLE		
SD MANHOLE		
WATER VALVE		
EXTRUDED CURB		
SPOT ELEVATION	50.00	+ 43.32
SILT FENCE		
"V" DITCH W/ ROCK CHECK DAM		
CONTOURS	50	50
ROCK QUARRY SPALLS		
CLEARING LIMITS		
CB PROTECTION		

TESC/SETTLING POND

TESC POND TOP AREA REQUIRED ..... 2437 S.F.
TESC POND TOP PROVIDED (44'X89' @ EL = 73.00) ..... 3,916 S.F.
TESC BOT AREA (14'X59' @ EL = 68.00) ..... 836 S.F.
TOP OF BERM 74.00
TOP OF LIVE STORAGE 73.00
INVERT ELEV. OUT 69.00
LIVE STORAGE VOLUME ..... 10,432 S.F.
BOT ELEV. 68.00
SIDE SLOPES 3:1

NOTES:

1. SEE ARCHITECTURAL SITE PLAN FOR HORIZONTAL CONTROL.
2. SEE SHEET G2 FOR CITY STANDARD NOTES TO GOVERN CONSTRUCTION.
3. TESC MEASURES ARE THE MINIMUM MEASURES REQUIRED. ADDITIONAL MEASURES MAY BE REQUIRED BY THE CITY OF SUMNER. ALL TESC ELEMENTS MUST BE INSPECTED AFTER EACH STORM EVENT.
4. ALL FILL MUST BE FROM A CITY APPROVED SOURCE.
5. THE CONTRACTOR SHALL SUBMIT TO THE CITY A HAUL ROUTE AND SCHEDULE PRIOR TO OBTAINING THE GRADING PERMIT.

REQUIREMENTS FOR EXPOSED SOIL STABILIZATION

* STABILIZATION SHALL CONSIST OF MULCHING OR HYDROSEEDING IF SHOWN ON THE PLANS MULCHING SHALL BE HAY OR STRAW APPLIED AT A RATE OF 100 BALES PER ACRE (APPROX. 2" THICKNESS). APPLY MIXTURE BELOW TO PREPARED SEEDBED AT A RATE OF 120 LB/ACRE

URBAN APPLICATION	PROPORTIONS BY WEIGHT	% PURITY	% GERMINATION
KENTUCKY BLUE GRASS (ADELPHI, BARON OR FLYKING)	30%	85	80
CREEPING RED FESCUE (PENNLAWN)	40%	98	90
PERENNIAL RYE (DERBY OR PENNANT)	30%	95	90

* SEE TESC NOTE 7 SHT G2 FOR MANDATED TIMING REQUIREMENTS FOR STABILIZATION.

UTILITY CONFLICT NOTE:

CAUTION:

THE CONTRACTOR SHALL BE RESPONSIBLE FOR VERIFYING THE LOCATION, DIMENSION, AND DEPTH OF ALL EXISTING UTILITIES WHETHER SHOWN ON THESE PLANS OR NOT BY POTHOLING THE UTILITIES AND SURVEYING THE HORIZONTAL AND VERTICAL LOCATION PRIOR TO CONSTRUCTION. THIS SHALL INCLUDE CALLING UTILITY LOCATE @ 811 AND THEN POTHOLING ALL OF THE EXISTING UTILITIES AT LOCATIONS OF NEW UTILITY CROSSINGS TO PHYSICALLY VERIFY WHETHER OR NOT CONFLICTS EXIST. LOCATIONS OF SAID UTILITIES AS SHOWN ON THESE PLANS ARE NOT GUARANTEED AND ARE SUBJECT TO VARIATION. IF CONFLICTS SHOULD OCCUR, THE CONTRACTOR SHALL CONSULT POE ENGINEERING, INC. TO RESOLVE ALL PROBLEMS PRIOR TO PROCEEDING WITH CONSTRUCTION.

PROJECT REF: SIT2016-XXXXX

THESE PLANS ARE "APPROVED" FOR CONFORMANCE WITH THE CITY OF SUMNER ENGINEERING DIVISION'S REQUIREMENTS

APPROVED BY:

DATE APPROVED:

REV.	DATE	BY	DESCRIPTION

POE Engineering, Inc.
CIVIL & STRUCTURAL ENGINEERING/CONSULTING
1314 8TH STREET N.E., SUITE 201
AUBURN, WASHINGTON 98002
(253) 833-4052 / FAX (253) 833-4053

JOB TITLE: SUMNER PARK 410 — SUMNER, WA

162XX AUTO LN

SHEET TITLE: GRADE & FILL PLAN

ALAN F. POE — STATE OF WASHINGTON — 27060 — REGISTERED PROFESSIONAL ENGINEER

DATE: JULY 2016
DRAWN BY: G.MO
DESIGN BY: A.F.P.
JOB NO.: 16-022
SHEET NO.: G1

GENERAL NOTES

1. ALL MATERIAL AND WORKMANSHIP SHALL CONFORM TO THE MOST RECENT WSDOT STANDARD SPECIFICATIONS FOR ROAD, BRIDGE, AND MUNICIPAL CONSTRUCTION AND THE CITY OF SUMNER DEVELOPMENT SPECIFICATIONS. IN CASE OF CONFLICT, THE CITY DEVELOPMENT SPECIFICATIONS AND STANDARD DETAILS TAKE PRECEDENCE.
2. PRIOR TO ANY WORK COMMENCING, THE CONTRACTOR SHALL ATTEND A PRECONSTRUCTION MEETING TO BE ATTENDED BY ALL MAJOR CONTRACTORS, REPRESENTATIVES OF INVOLVED UTILITIES, AND THE CITY OF SUMNER. CALL (253) 299-5700 TO SCHEDULE A MEETING AT LEAST TWO (2) WORKING DAYS IN ADVANCE.
3. SITE OWNER IS TO OBTAIN ALL PERMITS REQUIRED FROM THE STATE TO INCLUDE BUT NOT TO BE LIMITED TO THE NPDES STORMWATER GENERAL PERMIT.
4. THE CONTRACTOR SHALL NOTIFY THE COUNTY AND/OR STATE, AND OBTAIN ALL NECESSARY PERMITS AND APPROVALS IF CONSTRUCTION IS TO TAKE PLACE IN COUNTY AND/OR STATE RIGHT-OF-WAY.
5. ALL WORK WITHIN THE CITY RIGHT-OF-WAY SHALL BE CONDUCTED BY A LICENSED, BONDED, AND INSURED CONTRACTOR. THE CONTRACTOR SHALL BE REQUIRED TO SUBMIT A STREET OBSTRUCTION NOTIFICATION FORM, INCLUDING A TRAFFIC CONTROL PLAN IN CONFORMANCE WITH THE MANUAL ON UNIFORM TRAFFIC CONTROL DEVICES AND WSDOT SPECIFICATION SECTION 1-10, TO THE PUBLIC WORKS DEPARTMENT FOR REVIEW AND APPROVAL A MINIMUM OF TWO (2) FULL WORKING DAYS PRIOR TO STREET OBSTRUCTION. NOTE THAT THE DAY THE STREET OBSTRUCTION NOTIFICATION FORM IS SUBMITTED TO THE CITY SHALL NOT COUNT AS ONE OF THE TWO DAYS. A NEW FORM WILL BE REQUIRED IF THE TIME, DATE, OR LOCATION OF THE PROPOSED OBSTRUCTION CHANGES FROM THAT REPORTED ON THE ORIGINAL FORM. CERTIFIED COPIES OF THE CONTRACTOR'S BUSINESS LICENSE AND INSURANCE POLICY SHALL BE SUBMITTED TO THE PUBLIC WORKS DEPARTMENT BEFORE PERMIT ISSUANCE.
6. ANY STRUCTURE AND/OR OBSTRUCTION THAT NEED TO BE REMOVED OR RELOCATED AS A RESULT OF THIS PROJECT SHALL BE DONE SO AT THE DEVELOPER'S EXPENSE.
7. ANY DISTURBANCE OR DAMAGE TO CRITICAL AREAS AND ASSOCIATED BUFFERS SHALL BE MITIGATED IN ACCORDANCE WITH A MITIGATION PLAN APPROVED BY THE SUMNER COMMUNITY DEVELOPMENT DEPARTMENT. THE PREPARATION AND IMPLEMENTATION OF THE MITIGATION PLAN SHALL BE AT THE DEVELOPER'S EXPENSE.
8. ALL MANHOLES AND CATCH BASINS SHALL BE COVERED WITH TEMPORARY COVERS TO PREVENT ENTRANCE OF DIRT AND DEBRIS DURING CONSTRUCTION.
9. BURIED UTILITIES ARE SHOWN IN THE APPROXIMATE LOCATION. THE CONTRACTOR SHALL LOCATE ALL UTILITIES PRIOR TO ANY CONSTRUCTION. CALL 1-800-424-5555 FOR "ONE CALL LOCATES".
10. ANY REVISIONS MADE TO THESE PLANS MUST BE REVIEWED AND APPROVED BY THE ENGINEER OF RECORD AND THE CITY PUBLIC WORKS DEPARTMENT PRIOR TO IMPLEMENTATION IN THE FIELD.
11. TRAFFIC CONTROL SHALL BE MAINTAINED BY THE CONTRACTOR. CONSTRUCTION SIGNS, CONES, BARRICADES, AND FLAGGERS SHALL BE EMPLOYED AS SPECIFIED ON THE APPROVED TRAFFIC CONTROL PLANS OR AS REQUIRED BY THE PUBLIC WORKS DEPARTMENT.
12. AN APPROVED COPY OF THESE PLANS WITH REVISIONS MUST BE ON SITE WHENEVER CONSTRUCTION WORK IS IN PROGRESS.
13. THE PUBLIC WORKS DEPARTMENT REQUIRES THE CONTRACTOR TO PROVIDE ADEQUATE HORIZONTAL AND VERTICAL CONTROL AT ALL TIMES ON SITE FOR PERIODIC SPOT CHECKS BY CITY PERSONNEL. THIS CONTROL WILL CONSIST OF FRONT-PROPERTY CORNER OFFSETS (20 FEET) STAKED PERPENDICULAR TO THE ROAD CENTERLINE. ALL CURVE RADIUS POINTS WILL BE STAKED.
14. PRIVATE UTILITY EASEMENTS ARE REQUIRED ON THE FRONT 10 FEET OF EACH LOT.
15. IF WORKERS ENTER ANY TRENCH OR OTHER EXCAVATION, FOUR (4) FEET OR MORE IN DEPTH, THAT DOES NOT MEET THE OPEN PIT REQUIREMENTS OF WSDOT SECTION 2-09.3, THE TRENCH/EXCAVATION SHALL BE SHORED AND CRIBBED. THE CONTRACTOR ALONE SHALL BE RESPONSIBLE FOR WORKER SAFETY. ALL TRENCH SAFETY SYSTEMS SHALL MEET THE REQUIREMENTS OF THE WASHINGTON INDUSTRIAL SAFETY AND HEALTH ACT, CHAPTER 49 17 RCW.
16. EAST PIERCE FIRE AND RESCUE SHALL BE NOTIFIED IMMEDIATELY OF ALL GAS LINE BREAKS.
17. CONSTRUCTION HOURS ARE MONDAY THROUGH FRIDAY, 7:00 A.M. TO 6:00 P.M., AND SATURDAY, SUNDAY, AND HOLIDAYS, 10:00 A.M. TO 6:00 P.M.. WORK CONDUCTED OUTSIDE THESE HOURS SHALL BE APPROVED BY THE COMMUNITY DEVELOPMENT DEPARTMENT A MINIMUM OF TWO (2) WORKING DAYS IN ADVANCE. THE DAY OF SUBMITTAL SHALL NOT BE COUNTED AS ONE OF THE TWO REQUIRED DAYS. ALL CITY PERSONNEL OVERTIME INSPECTION FEES SHALL BE PAID BY THE CONTRACTOR.
18. BEFORE COMPLETION OF THE PROJECT, THE CONTRACTOR SHALL OBTAIN A "PUNCH LIST" PREPARED BY THE PUBLIC WORKS DEPARTMENT DETAILING REMAINING ITEMS OF WORK TO BE COMPLETED. ALL ITEMS OF WORK LISTED SHALL BE SATISFACTORILY COMPLETED PRIOR TO ACCEPTANCE OF THE WATER SYSTEM AND PROVISION OF SANITARY SEWER SERVICE.
19. RECORD DRAWINGS (MYLAR) WILL BE SUBMITTED TO THE CITY BEFORE FINAL ACCEPTANCE.
20. NO CONSTRUCTION WORK SHALL BEGIN UNTIL THE OWNER/DEVELOPER HAS ACQUIRED ALL REQUIRED RIGHT-OF-WAY AND/OR EASEMENTS, AND HAS PROVIDED THE PUBLIC WORKS DEPARTMENT WITH COPIES OF THE RECORDED DOCUMENTS.

STORMWATER SITE PLAN NOTES

1. ALL WORKMANSHIP AND MATERIALS SHALL BE IN CONFORMANCE WITH THE CITY OF SUMNER DEVELOPMENT SPECIFICATIONS AND STANDARD DETAILS, THE MOST CURRENT COPY OF THE WSDOT STANDARD SPECIFICATIONS FOR ROAD, BRIDGE, AND MUNICIPAL CONSTRUCTION, THE ECOLOGY MANUAL, AND THE 2009 KING COUNTY SURFACE WATER DESIGN MANUAL.
2. ALL MANHOLES AND CATCH BASINS SHALL BE COVERED WITH TEMPORARY COVERS TO PREVENT DIRT AND DEBRIS FROM BEING PUSHED INTO THEM DURING CONSTRUCTION.
3. PROVISIONS SHALL BE MADE TO AVOID THE TRACKING OF SEDIMENT BY CONSTRUCTION VEHICLES ONTO PAVED PUBLIC ROADS. IF SEDIMENT IS DEPOSITED, IT IS TO BE CLEANED EVERY DAY BY SWEEPING.
4. CITY INSPECTION SHALL BE REQUIRED AT THE FOLLOWING STAGES OF CONSTRUCTION:
   - COMPLETION OF FLOW ATTENUATION OR WATER QUALITY STRUCTURES.
   - UPON COMPLETION OF EXCAVATION OF THE DETENTION FACILITIES SUB-FOUNDATION AND INSTALLATION OF STRUCTURAL SUPPORTS OR REINFORCEMENT, AS REQUIRED BY THE APPROVED PLANS.
   - DURING PLACEMENT OF STRUCTURAL FILL OR CONCRETE.
   - DURING PIPING AND CATCH BASIN INSTALLATION.
   - DURING BACKFILL OF FOUNDATIONS OR TRENCHES.
   - DURING CONSTRUCTION OF EMBANKMENTS.
   - UPON COMPLETION OF FINAL GRADING AND PERMANENT STABILIZATION.
5. ALL APPROVALS AND PERMITS REQUIRED BY THE CITY OF SUMNER SHALL BE OBTAINED BY THE CONTRACTOR PRIOR TO THE START OF CONSTRUCTION.
6. STORMWATER PIPE BEDDING AND BACKFILL MATERIALS AND PRACTICES SHALL BE IN ACCORDANCE WITH THE CITY OF SUMNER DEVELOPMENT SPECIFICATIONS AND STANDARD DETAILS.
7. ALL STORMWATER IMPROVEMENTS SHALL BE CONSTRUCTED IN ACCORDANCE WITH THESE APPROVED PLANS. ANY DEVIATION FROM THESE PLANS SHALL REQUIRE APPROVAL FROM THE OWNER, ENGINEER OF RECORD, AND THE CITY.
8. NATIVE MATERIAL SHALL NOT BE ALLOWED FOR BACKFILL UNLESS IT CONFORMS TO THE CITY OF SUMNER BACKFILL REQUIREMENTS. THE CONTRACTOR SHALL BE RESPONSIBLE FOR LABORATORY ANALYSIS AND ASSOCIATED COSTS REQUIRED TO VERIFY CONFORMANCE.
9. THE CONTRACTOR SHALL ADJUST ALL CATCH BASIN RIMS FLUSH WITH FINAL GRADE.
10. THE CONTRACTOR SHALL PROVIDE A MINIMUM 3-FOOT-HORIZONTAL AND 0.5-FOOT-VERTICAL SEPARATION BETWEEN STORM LINES AND ALL OTHER UTILITIES.
11. ALL PIPE AND APPURTENANCES SHALL BE LAID ON A PROPERLY PREPARED FOUNDATION IN ACCORDANCE WITH WSDOT SECTION 7-08. THIS SHALL INCLUDE LEVELING AND COMPACTING THE TRENCH BOTTOM, THE TOP OF THE FOUNDATION MATERIAL, AND ANY REQUIRED PIPE BEDDING TO A UNIFORM GRADE SO THAT THE ENTIRE PIPE IS SUPPORTED BY A UNIFORMLY DENSE, UNYIELDING BASE.
12. ALL DRAINAGE STRUCTURES, SUCH AS CATCH BASINS AND MANHOLES, NOT LOCATED WITHIN A TRAVELED ROADWAY OR SIDEWALK SHALL HAVE SOLID LOCKING LIDS.
13. ALL DRIVEWAY CULVERTS LOCATED WITHIN CITY OF SUMNER RIGHT-OF-WAY SHALL BE OF SUFFICIENT LENGTH TO PROVIDE A MINIMUM 3:1 SLOPE FROM THE EDGE OF THE DRIVEWAY TO THE BOTTOM OF THE DITCH. CULVERTS SHALL HAVE BEVELED END SECTIONS TO MATCH THE SIDE SLOPE, AND SHALL BE INSTALLED WITH A TRASH RACK ON THE UPSTREAM END.
14. ROCK FOR EROSION PROTECTION OF ROADWAY DITCHES, WHERE REQUIRED, MUST BE OF SOUND QUARRY ROCK, PLACED TO A DEPTH OF 1 FOOT.
15. STORM STUB-OUTS SHALL BE PROVIDED FOR EACH INDIVIDUAL LOT. STUB-OUTS ON EACH LOT SHALL BE LOCATED WITH A 5-FOOT-HIGH, 2-INCH BY 4-INCH STAKE, MARKED "STORM" OR "DRAIN". THE STUB-OUT SHALL EXTEND ABOVE SURFACE LEVEL, BE VISIBLE, AND BE SECURED TO THE STAKE.

TESC NOTES

1. APPROVAL OF THIS STORMWATER SITE PLAN DOES NOT CONSTITUTE AN APPROVAL OF PERMANENT ROAD OR DRAINAGE DESIGN.
2. THE IMPLEMENTATION OF THESE TESC BMPS AND THE CONSTRUCTION, MAINTENANCE, REPLACEMENT, AND UPGRADING OF THESE TESC FACILITIES IS THE RESPONSIBILITY OF THE APPLICANT/CONTRACTOR UNTIL ALL CONSTRUCTION IS APPROVED.
3. THE BOUNDARIES OF THE CLEARING LIMITS SHOWN ON THIS PLAN SHALL BE CLEARLY FLAGGED IN THE FIELD PRIOR TO CONSTRUCTION. DURING THE CONSTRUCTION PERIOD, NO DISTURBANCE BEYOND THE FLAGGED CLEARING LIMITS SHALL BE PERMITTED. THE FLAGGING SHALL BE MAINTAINED BY THE ESC SUPERVISOR FOR THE DURATION OF CONSTRUCTION.
4. THE TESC BMPS SHOWN MUST BE CONSTRUCTED PRIOR TO ALL CLEARING AND GRADING ACTIVITIES, AND IN SUCH A MANNER TO ENSURE THAT SEDIMENT-LADEN WATER DOES NOT ENTER THE DRAINAGE SYSTEM OR VIOLATE APPLICABLE WATER STANDARDS.
5. THE PERMITTEE SHALL NOTIFY THE CITY ENGINEER OR DESIGNEE TO SCHEDULE INSPECTIONS AT THE COMPLETION OF THE FOLLOWING PHASES OF WORK:
   - PRECONSTRUCTION INSPECTION. PRIOR TO THE COMMENCEMENT OF ANY OTHER WORK, THE INSPECTION OF EROSION AND SEDIMENT CONTROL DEVICES SHALL TAKE PLACE WHEN INSTALLATION OF ALL THE EROSION AND SEDIMENT CONTROL DEVICES HAVE BEEN COMPLETED ACCORDING TO APPROVED PLANS. ONLY THE MINIMUM AREA NECESSARY FOR INSTALLATION OF EROSION AND SEDIMENT CONTROL DEVICES SHALL BE CLEARED AND/OR GRADED PRIOR TO THIS INSPECTION.
   - ROUGH GRADING INSPECTION. WHEN ALL ROUGH GRADING IS COMPLETE, INSPECTION OF THE SITE SHALL TAKE PLACE TO DETERMINE THE SATISFACTORY FUNCTIONING OF ALL EROSION AND SEDIMENT CONTROL DEVICES.
   - FINAL INSPECTION. UPON COMPLETION OF ALL CONSTRUCTION, INSPECTION OF THE SITE SHALL TAKE PLACE TO DETERMINE THAT ALL TEMPORARY EROSION AND SEDIMENT CONTROL DEVICES HAVE BEEN REMOVED AND THAT THE SITE HAS BEEN PERMANENTLY STABILIZED.
6. THE TESC BMPS SHOWN ON THIS PLAN ARE THE MINIMUM REQUIREMENTS FOR ANTICIPATED SITE CONDITIONS. DURING THE CONSTRUCTION PERIOD, THESE TESC FACILITIES SHALL BE UPGRADED (E.G., ADDITIONAL SUMPS, RELOCATION OF DITCHES AND SILT FENCES, ETC.) AS NEEDED FOR UNEXPECTED STORM EVENTS AND AS THE CITY REQUIRES.
7. FROM OCTOBER 1 THROUGH APRIL 30, NO SOILS SHALL REMAIN EXPOSED AND UNWORKED FOR MORE THAN 2 DAYS. FROM MAY 1 THROUGH SEPTEMBER 30, NO SOILS SHALL REMAIN EXPOSED AND UNWORKED FOR MORE THAN 7 DAYS. THIS CONDITION APPLIES TO ALL SOILS ON SITE, WHETHER AT FINAL GRADE OR NOT. SEE THE DEPARTMENT OF ECOLOGY 2005 STORMWATER MANAGEMENT MANUAL FOR WESTERN WASHINGTON, VOLUME II, FOR ADDITIONAL SOIL STABILIZATION REQUIREMENTS.
8. ANY AREA NEEDING TESC MEASURES, NOT REQUIRING IMMEDIATE ATTENTION, SHALL BE ADDRESSED WITHIN 15 DAYS.
9. AT NO TIME SHALL MORE THAN 1 FOOT OF SEDIMENT BE ALLOWED TO ACCUMULATE WITHIN A CATCH BASIN. ALL CATCH BASINS AND CONVEYANCE LINES SHALL BE CLEANED PRIOR TO PAVING. THE CLEANING OPERATION SHALL NOT FLUSH SEDIMENT-LADEN WATER INTO THE DOWNSTREAM SYSTEM.
10. STABILIZED CONSTRUCTION ENTRANCES SHALL BE INSTALLED AT THE BEGINNING OF CONSTRUCTION AND MAINTAINED FOR THE DURATION OF THE PROJECT. ADDITIONAL MEASURES MAY BE REQUIRED TO ENSURE THAT ALL PAVED AREAS ARE KEPT CLEAN FOR THE DURATION OF THE PROJECT.
11. PROVISIONS SHALL BE MADE TO AVOID THE TRACKING OF SEDIMENT BY CONSTRUCTION VEHICLES ONTO PAVED PUBLIC ROADS. IF SEDIMENT IS DEPOSITED, THE ROADS ARE TO BE CLEANED EVERY DAY BY SWEEPING.
12. ANY PERMANENT RETENTION/DETENTION FACILITY USED AS A TEMPORARY SETTLING BASIN SHALL BE MODIFIED WITH THE NECESSARY EROSION-CONTROL MEASURES AND SHALL PROVIDE ADEQUATE STORAGE CAPACITY AND SHALL BE CLEANED OUT ENTIRELY FOLLOWING PROJECT COMPLETION.
13. AS CONSTRUCTION PROGRESSES AND UNEXPECTED SEASONAL CONDITIONS DICTATE, AND AS THE CITY REQUIRES, THE PERMITTEE SHOULD ANTICIPATE THAT MORE TESC MEASURES WILL BE NECESSARY TO PROTECT ADJACENT PROPERTIES AND ENSURE ADEQUATE WATER QUALITY FOR SITE RUNOFF. IT SHALL BE THE RESPONSIBILITY OF THE ESC SUPERVISOR TO ADDRESS DEFICIENT TESC CONDITIONS AND PROVIDE ADDITIONAL FACILITIES, OVER AND ABOVE MINIMUM REQUIREMENTS OUTLINED ON THE APPROVED PLANS.
14. THE ESC SUPERVISOR SHALL INSPECT ALL TESC MEASURES MONTHLY DURING THE DRY SEASON (MAY 1 TO SEPTEMBER 30), WEEKLY DURING THE WET SEASON (OCTOBER 1 TO APRIL 30), AND IMMEDIATELY FOLLOWING SIGNIFICANT STORMS (0.4 INCHES OF PRECIPITATION IN 24 HOURS). WRITTEN RECORD OF THESE INSPECTIONS SHALL BE RETAINED ON SITE, WITH A COPY OF THE INSPECTION REPORT BEING FORWARDED TO THE CITY ENGINEER OR DESIGNEE WITHIN 48 HOURS OF EACH INSPECTION. ESC SUPERVISOR SHALL BE RESPONSIBLE FOR MAINTAINING ALL TESC BMP'S AS NECESSARY TO ENSURE CONTINUED SATISFACTORY FUNCTION AND OPERATION.
15. RETURN SILTATION CONTROL AREAS TO ORIGINAL OR BETTER GROUND CONDITIONS AT PROJECT COMPLETION.

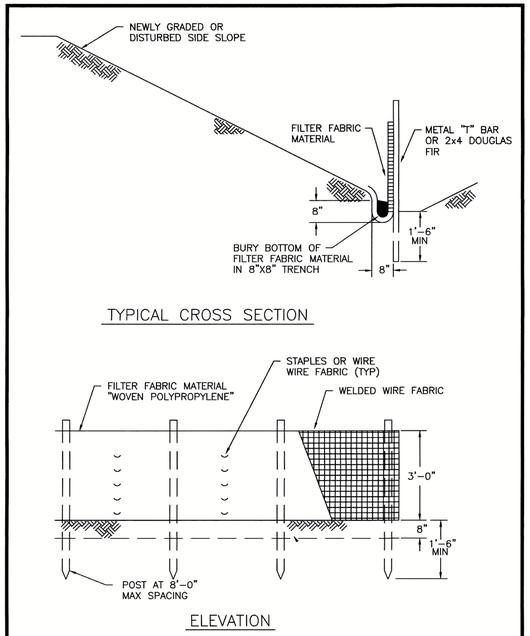

SUMNER — PUBLIC WORKS DEPARTMENT

** SILTATION FENCE DETAIL				
DRAWN	SCALE NTS	DATE APPROVED 7/24/2007	REVISED 07/02/10	CITY STANDARD
FILE NAME		CHECKED BY	PAGE 1 OF 1	SD5-9

**** SILT FENCE MAINTENANCE STANDARDS:**

1. ANY DAMAGE SHALL BE REPAIRED IMMEDIATELY.
2. IF CONCENTRATED FLOWS ARE EVIDENT UPHILL OF THE FENCE, THEY MUST BE INTERCEPTED AND CONVEYED TO A SEDIMENT POND.
3. THE UPHILL SIDE OF THE FENCE SHALL BE PERIODICALLY CHECKED FOR SIGNS OF CLOGGING CAUSING CHANNELIZATION OF THE FLOWS PARALLEL TO THE FENCE. IN SUCH CASE, REPLACE THE FENCE AND OR REMOVE THE TRAPPED DEBRIS AND SEDIMENT.
4. SEDIMENT AND DEBRIS MUST BE REMOVED WHEN 6" HIGH.
5. REMOVE AND REPLACE DETERIORATED FILTER FABRIC DUE TO ULTRAVIOLET BREAKDOWN.
6. UPON COMPLETION OF WORK AND WHEN ALLOWED BY THE CITY OF SUMNER, THE CONTRACTOR SHALL REMOVE ALL FILTER FABRIC FENCE AND GRAVEL. PROVIDE FINISH GRADES WITH SURFACING MATERIAL AND LANDSCAPING AS REQUIRED.

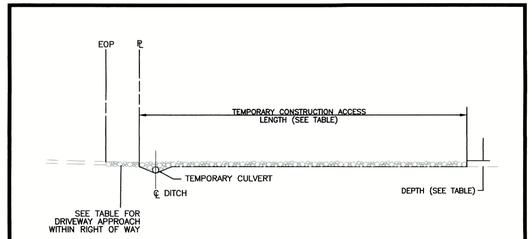

NOTE:

THE 'TEMPORARY CONSTRUCTION ACCESS' WILL BE THE ONLY ALLOWED POINT OF ACCESS IN AND OUT OF THE CONSTRUCTION AREA.

(SEE STANDARD DETAIL M-8.2 FOR ADDITIONAL NOTES AND "TABLE")

SUMNER — PUBLIC WORKS DEPARTMENT

TEMPORARY CONSTRUCTION ACCESS				
DRAWN	SCALE NTS	DATE APPROVED 9/3/2007	REVISED 05/30/10	CITY STANDARD
FILE NAME		CHECKED BY	PAGE 1 OF 1	M-8.1

TEMPORARY CONSTRUCTION ENTRANCE CRITERIA FOR TESC, GRADE & FILL, SITE WORK & BUILDING CONSTRUCTION					CATEGORY
DESCRIPTION	TYPE 1	TYPE 2	TYPE 3	TYPE 4	
SITE SIZE IN ACRES	<1.0	1.0 to 3.0	3.0 to 6.0	>6.0	SITE SIZE CRITERIA
VOLUME OF CUT & FILL	<2,500	<20,000	<100,000	>100,000	
MINIMUM WIDTH IN FEET	15	24	24	30	GEOMETRY & DIMENSIONS OF ENTRANCE
MIN. DEPTH OF SPALLS (INCHES)	8	12	12	18	
MIN. LENGTH OF SPALL ENTRANCE	50	75	100	150	
MIN. RETURN RAD. OFF ST. (FT.)	0	30	35	40	
DEPTH OF HMA APPROACH IN ROW	3	4	4	6	
TYPE OF HMA FOR APPROACHES	CLASS 1/2"	CLASS 1/2"	CLASS 1/2"	CLASS 1/2"	MATERIAL SPECIFICATIONS FOR ENTRANCE IN RIGHT-OF-WAY
CONCRETE APPROACH THICKNESS	6	6	7	7	
TYPE OF CONCRETE CEMENT	6 SACK-1 1/2	6 SACK-1 1/2	6 SACK-1 1/2	6 SACK-1 1/2	
28 DAY OF STRENGHT OF CONC.	4,000 lb.	4,000 lb.	4,000 lb.	4,000 lb.	
CONC. CEMENT REINFORCEMENT	FIBER MESH	#4@12"E.W.	#5@12"E.W.	#5@12"E.W.	
GEOTEXTILE REQUIRED	YES	YES	YES	YES	
SIZE OF QUARRY SPALLS	2" - 4"	4" - 6"	4" - 6"	4" - 6"	

PURPOSE: THE PURPOSE OF CONSTRUCTION ENTRANCES IS TO REDUCE THE AMOUNT OF SEDIMENT TRANSPORTED OFF-SITE BY CONSTRUCTION VEHICLES, PROTECTION OF THE CITY'S STORM DRAINAGE SYSTEM FROM UN-DUE AMOUNTS OF SEDIMENT AND PROTECTION OF THE CITY'S STREETS AND ROADS. A HARD SURFACE APPROACH WITHIN THE LIMITS OF THE RIGHT-OF-WAY PROTECTS THE CITY STREET AND REDUCES THE POTENTIAL OF ROOKS GETTING ONTO THE STREETS.

NOTES:

1. ACP WILL BE USED WITHIN RIGHT-OF-WAY'S WHERE THE STREET IS A ROAD SECTION WITHOUT CURB & GUTTER.
2. FOR ACCESS OFF IMPROVED STREETS, PROVIDE CONCRETE DRIVEWAY IN R.O.W. AS SPECIFIED IN THE TABLE.
3. CURB CUTS SHALL MEET THE SAME MATERIAL REQUIREMENTS AS CONCRETE DRIVEWAY APPROACHES.
4. FOR ACP APPROACHES, EDGE OF ROAD SHALL BE SAW CUT, EDGE TACKED AND JOINT SEALED WITH AR4000.

DESIGN AND INSTALLATION SPECIFICATIONS:

1. SEE SUMNER STANDARD DETAIL M-8.1 FOR LAYOUT OF ENTRANCE
2. A SEPERATION GEOTEXTILE SHALL BE PLACED UNDER THE SPALLS TO PREVENT FINE SEDIMENTS FROM PUMPING UP INTO THE ROCK PAD. THE FABRIC SHALL CONFORM TO WSDOT STANDARD SPECIFICATION 9-33, TABLE 3 FOR SOIL STABILIZATION FABRIC.
3. FENCING SHALL BE INSTALLED AS NECESSARY TO RESTRICT TRAFFIC TO THE CONSTRUCTION ENTRANCE.
4. LOCATION OF CONSTRUCTION ENTRANCE TO BE APPROVED BY THE CITY ENGINEER. TYPE 1 AND 2 SITES WILL GENERALLY BE ALLOWED ONLY ONE ENTRANCE.
5. TRUCK ROUTES FOR TYPE 2, 3 AND 4 SITES SHALL BE SUBMITTED WITH THE PERMIT APPLICATION FOR REVIEW AND APPROVAL BY THE CITY ENGINEER.
6. PERMITEE SHALL POST STREET RESTORATION BOND FOR TYPE 2, 3 AND 4 SITES.

MAINTENCE STANDARDS:

1. QUARRY SPALLS SHALL BE ADDED IF THE PAD IS NO LONGER IN ACCORDANCE WITH THE SPECIFICATIONS.
2. IF THE ENTRANCE IS NOT PREVENTING SEDIMENT FROM BEING TRACKED ONTO PAVEMENT, THAN ALTERNATIVE MEASURES SHALL BE REQUIRED WHICH MAY INCLUDE STREET SWEEPING, INCREASING DIMENSIONS OF THE ENTRANCE OR THE INSTALLATION OF A WHEEL WASH.
3. ANY SPALLS THAT ARE LOOSENED FROM THE PAD AND END UP IN THE ROADWAY SHALL BE REMOVED IMMEDIATELY.
4. DIRT TRACKED ONTO THE STREETS SHALL BE REMOVED BY SWEEPERS.
5. ADDITIONAL MAINTENANCE AS REQUIRED BY THE CITY REPRESENTATIVE.

SUMNER — PUBLIC WORKS DEPARTMENT

TEMPORARY CONSTRUCTION ACCESS – NOTES				
DRAWN	SCALE NTS	DATE APPROVED 9/3/2007	REVISED 07/02/10	CITY STANDARD
FILE NAME		CHECKED BY	PAGE 1 OF 1	M-8.2

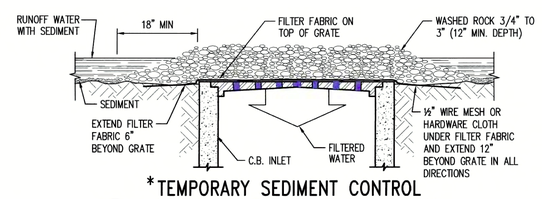

1 / G2 — *TEMPORARY SEDIMENT CONTROL INLET GRAVEL AND FILTER FABRIC

N.T.S.

*NOTE: CITY STANDARD DETAIL SHALL GOVERN IF AVAILABLE, VERIFY AT PRE-CONSTRUCTION MTG. INSPECTOR SHALL HAVE THE RIGHT TO REQUIRE AN UPDATED CITY STANDARD TO DETAIL SHOWN.

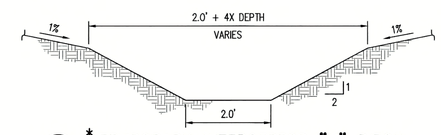

2 / G2 — *TEMPORARY INTERCEPTOR "V" DITCH

N.T.S.

*NOTE: CITY STANDARD DETAIL SHALL GOVERN IF AVAILABLE, VERIFY AT PRE-CONSTRUCTION MTG. INSPECTOR SHALL HAVE THE RIGHT TO REQUIRE AN UPDATED CITY STANDARD TO DETAIL SHOWN.

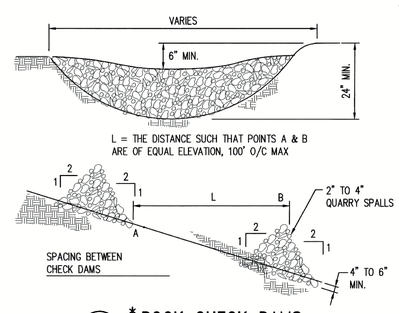

3 / G2 — *ROCK CHECK DAMS

N.T.S.

*NOTE: CITY STANDARD DETAIL SHALL GOVERN IF AVAILABLE, VERIFY AT PRE-CONSTRUCTION MTG. INSPECTOR SHALL HAVE THE RIGHT TO REQUIRE AN UPDATED CITY STANDARD TO DETAIL SHOWN.

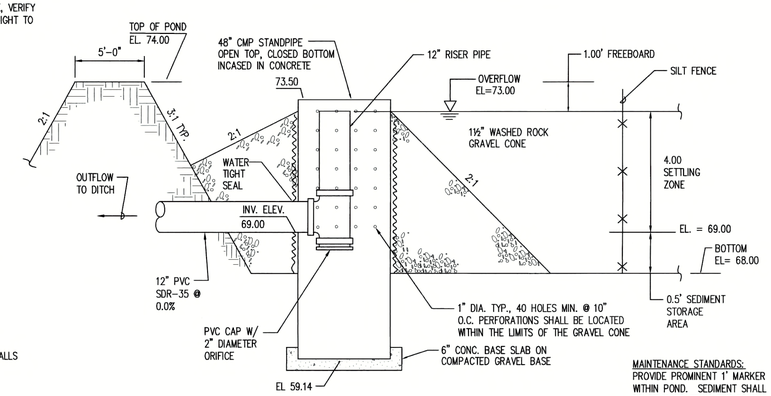

4 / G2 — T.E.S.C. POND OVERFLOW STRUCTURE

N.T.S.

MAINTENANCE STANDARDS:
PROVIDE PROMINENT 1' MARKER WITHIN POND. SEDIMENT SHALL BE REMOVED FROM THE POND WHEN IT REACHES 1' DEPTH. ANY DAMAGE TO THE POND EMBANKMENTS OR SLOPES SHALL BE REPAIRED.

SIT2016-XXXXX

THESE PLANS ARE "APPROVED" FOR CONFORMANCE WITH THE CITY OF SUMNER ENGINEERING DIVISION'S REQUIREMENTS

APPROVED BY:_____

DATE APPROVED:_____

REV.	DATE	BY	DESCRIPTION

POE Engineering, Inc.
CIVIL & STRUCTURAL ENGINEERING/CONSULTING
1314 8TH STREET N.E., SUITE 201
AUBURN, WASHINGTON 98002
(253) 833-4052 / FAX (253) 833-4053

JOB TITLE: SUMNER PARK 410 — 162XX AUTO LN — SUMNER, WA

SHEET TITLE: DETAILS & NOTES

ALAN F. POE — STATE OF WASHINGTON — 27060 — REGISTERED PROFESSIONAL ENGINEER — 8/1/16

DATE: JULY 2016
DRAWN BY: G.MO
DESIGN BY: A.F.P.
JOB NO.: 16-022
SHEET NO.: G2